2005 Vulcan 500 LTD

PARTS DIAGRAM

Carburetor

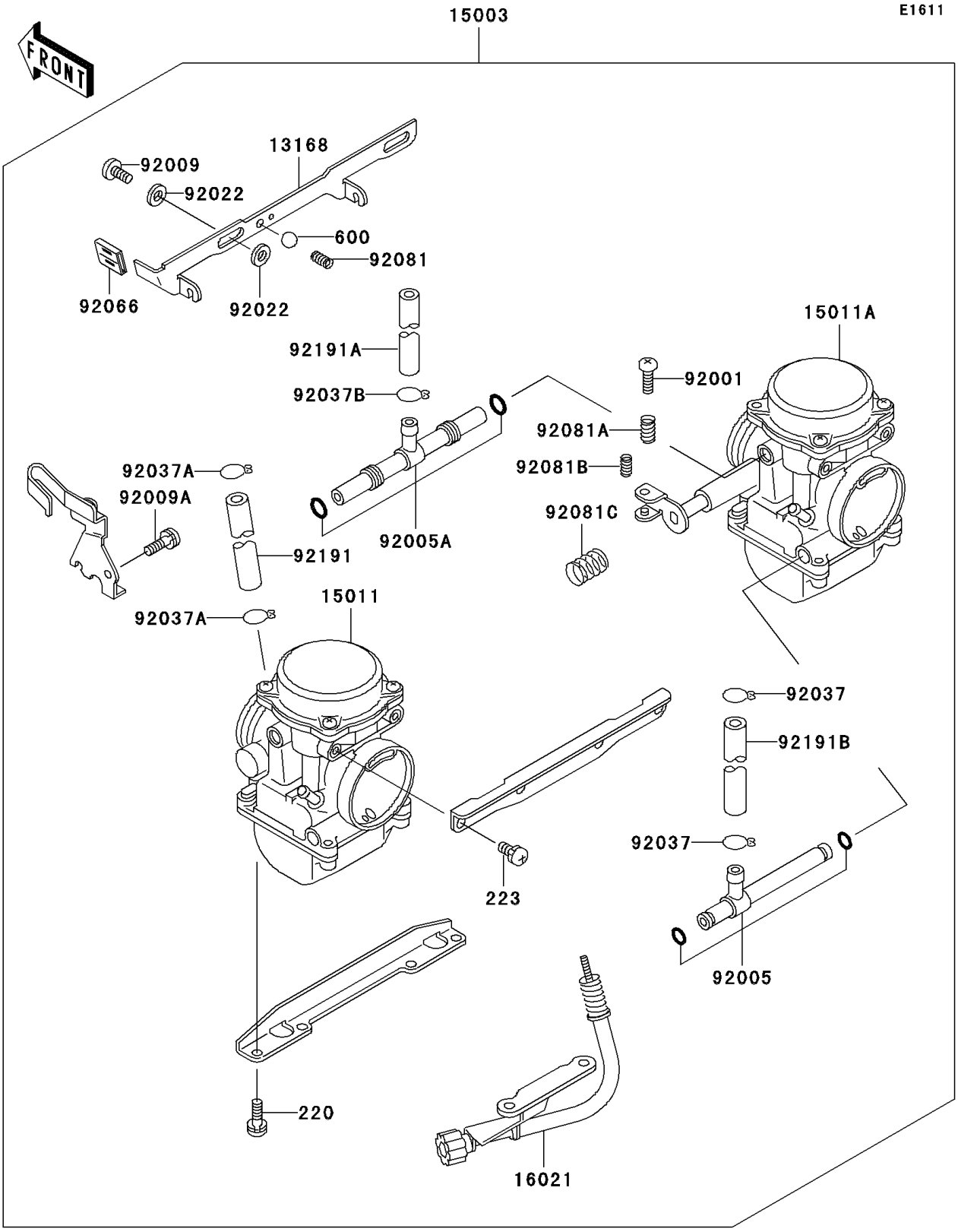

© 2026 Kawasaki Motors Corp., U.S.A.

2005 Vulcan 500 LTD

PARTS LIST

Carburetor

Kawasaki
Let the Good Times Roll®

ITEM NAME	PART NUMBER	QUANTITY
SCREW-PAN-CROS,6X16 (Ref # 220)	220B0616	4
SCREW-PAN-WS-CROS (Ref # 223)	223C0510	4
BALL-STEEL,3/16" (Ref # 600)	600A0600	1
LEVER,STARTER (Ref # 13168)	13168-1444	1
CARBURETOR-ASSY (Ref # 15003)	15003-1235	1
CARBURETOR,LH (Ref # 15011)	15011-1252	1
CARBURETOR,RH (Ref # 15011A)	15011-1253	1
SCREW-THROTTLE STOP (Ref # 16021)	16021-1175	1
BOLT,THROTTLE ADJUST (Ref # 92001)	92001-1998	1
FITTING (Ref # 92005)	92005-1325	1
FITTING (Ref # 92005A)	92005-1326	1
SCREW (Ref # 92009)	92009-1262	2
SCREW,5X10 (Ref # 92009A)	92009-1365	1
WASHER,6.1X11X0.8,POLYACETAL (Ref # 92022)	92022-1199	4
CLAMP,FUEL TUBE (Ref # 92037)	92037-1075	2
CLAMP,TUBE (Ref # 92037A)	92037-1477	2
CLAMP,TUBE (Ref # 92037B)	92037-1531	1
PLUG,STARTER LEVER (Ref # 92066)	92066-1157	1
SPRING,SHAFT STOP (Ref # 92081)	92081-1619	1
SPRING,THROTTLE ADJUST UPP (Ref # 92081A)	92081-1620	1
SPRING,THROTTLE ADJUST LWR (Ref # 92081B)	92081-1621	1
SPRING (Ref # 92081C)	92081-1876	1
TUBE,5X9X230 (Ref # 92191)	92191-1103	1
TUBE,7X11X330 (Ref # 92191A)	92191-1104	1
TUBE,7.3X12.5X320 (Ref # 92191B)	92191-1110	1

© 2026 Kawasaki Motors Corp., U.S.A.