1998 Vulcan 500 LTD

PARTS DIAGRAM

Air Cleaner

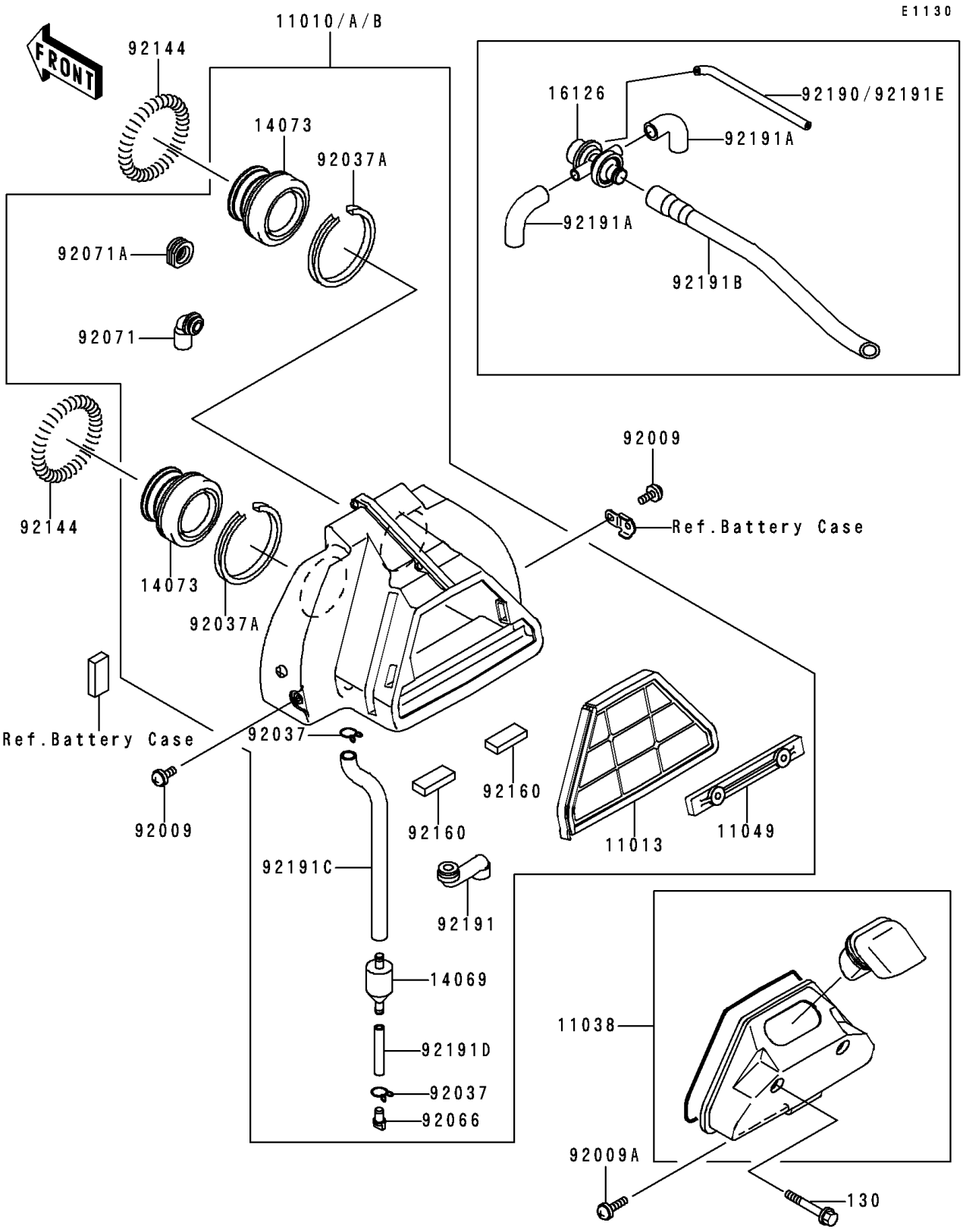

© 2026 Kawasaki Motors Corp., U.S.A.

1998 Vulcan 500 LTD

PARTS LIST

Air Cleaner

ITEM NAME	PART NUMBER	QUANTITY
BOLT-FLANGED (Ref # 130)	130H0660	2
ELEMENT-AIR FILTER (Ref # 11013)	11013-1250	1
CASE-ASSY-AIR FILTER (Ref # 11038)	11038-1107	1
BRACKET (Ref # 11049)	11049-1456	1
BREATHER (Ref # 14069)	14069-1051	1
DUCT,AIR FILTER (Ref # 14073)	14073-1651	2
VALVE,AIR SWITCH (Ref # 16126)	16126-1318	1
SCREW,6X10 (Ref # 92009)	92009-1402	2
SCREW,6X55 (Ref # 92009A)	92009-1754	1
CLAMP,TUBE (Ref # 92037)	92037-147	2
CLAMP,69MM (Ref # 92037A)	92037-1631	2
PLUG,DRAIN (Ref # 92066)	92066-1211	1
GROMMET (Ref # 92071A)	92071-1165	1
SPRING,AIR FILTER DUCT (Ref # 92144)	92144-1771	2
DAMPER (Ref # 92160)	92160-1689	2
TUBE,BREATHER (Ref # 92191)	92191-1044	1
TUBE (Ref # 92191A)	92191-1045	2
TUBE (Ref # 92191B)	92191-1046	1
TUBE,AIR FILTER (Ref # 92191C)	92191-1074	1
TUBE,6X4X60 (Ref # 92191D)	92191-1075	1
FILTER-ASSY-AIR (Ref # 11010A)	11010-1570	1
FILTER-ASSY-AIR (Ref # 11010B)	11010-1577	1
GROMMET,AIR FILTER (Ref # 92071)	92071-1114	1
TUBE,4X9X276 (Ref # 92190)	92190-1444	1
TUBE,4X10X266 (Ref # 92191E)	92191-1077	1

© 2026 Kawasaki Motors Corp., U.S.A.