1989 454 LTD

PARTS DIAGRAM

Swingarm/Shock Absorber

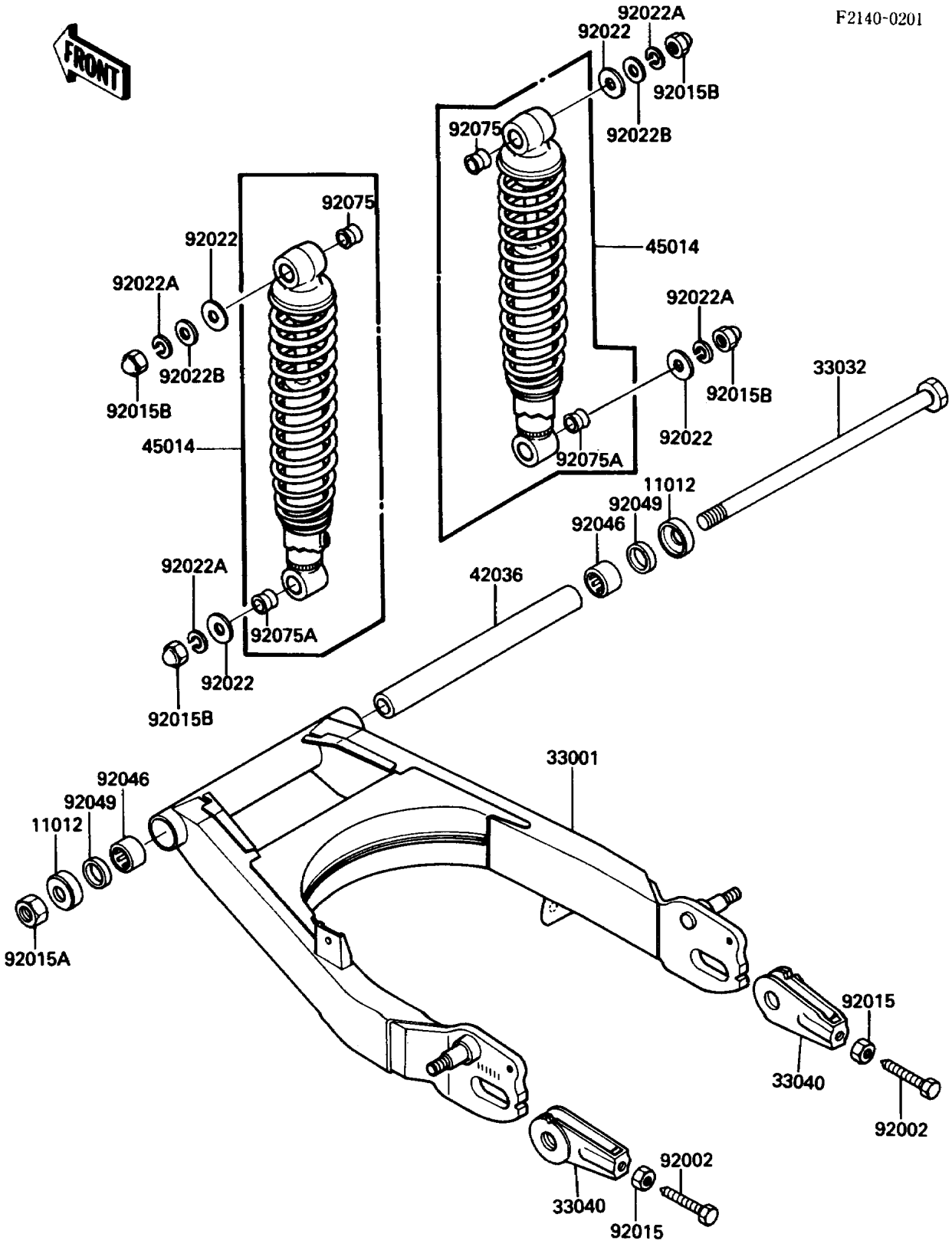

© 2026 Kawasaki Motors Corp., U.S.A.

1989 454 LTD

PARTS LIST

Swingarm/Shock Absorber

ITEM NAME	PART NUMBER	QUANTITY
CAP,SWING ARM (Ref # 11012)	11012-1029	2
ARM-COMP-SWING (Ref # 33001)	33001-1235	1
SHAFT-SWING ARM (Ref # 33032)	33032-1113	1
ADJUSTER-CHAIN (Ref # 33040)	33040-043	2
SLEEVE,SWING ARM (Ref # 42036)	42036-1018	1
SHOCKABSORBER (Ref # 45014)	45014-1305	2
BOLT,CHAIN ADJUSTER,8X50 (Ref # 92002)	92002-1076	2
NUT,8MM (Ref # 92015)	92015-1364	2
NUT,14MM (Ref # 92015A)	92015-1411	1
NUT,CAP,10MM (Ref # 92015B)	92020-003	4
WASHER,10.5X26X2.3 (Ref # 92022)	92022-044	4
WASHER,SPRING,10MM (Ref # 92022A)	92022-1540	4
WASHER,10.5X22X1.6 (Ref # 92022B)	92022-1558	2
BEARING-NEEDLE,HK2216 (Ref # 92046)	92046-1115	2
SEAL-OIL,MHA22284 (Ref # 92049)	92049-1059	2
DAMPER,SHOCKABSORBER (Ref # 92075)	45017-015	2
DAMPER,SHOCKABSORBER (Ref # 92075A)	92075-1387	2

© 2026 Kawasaki Motors Corp., U.S.A.