1987 454 LTD

PARTS DIAGRAM

Oil Pump(EN450AE000001&NAMI.029479)

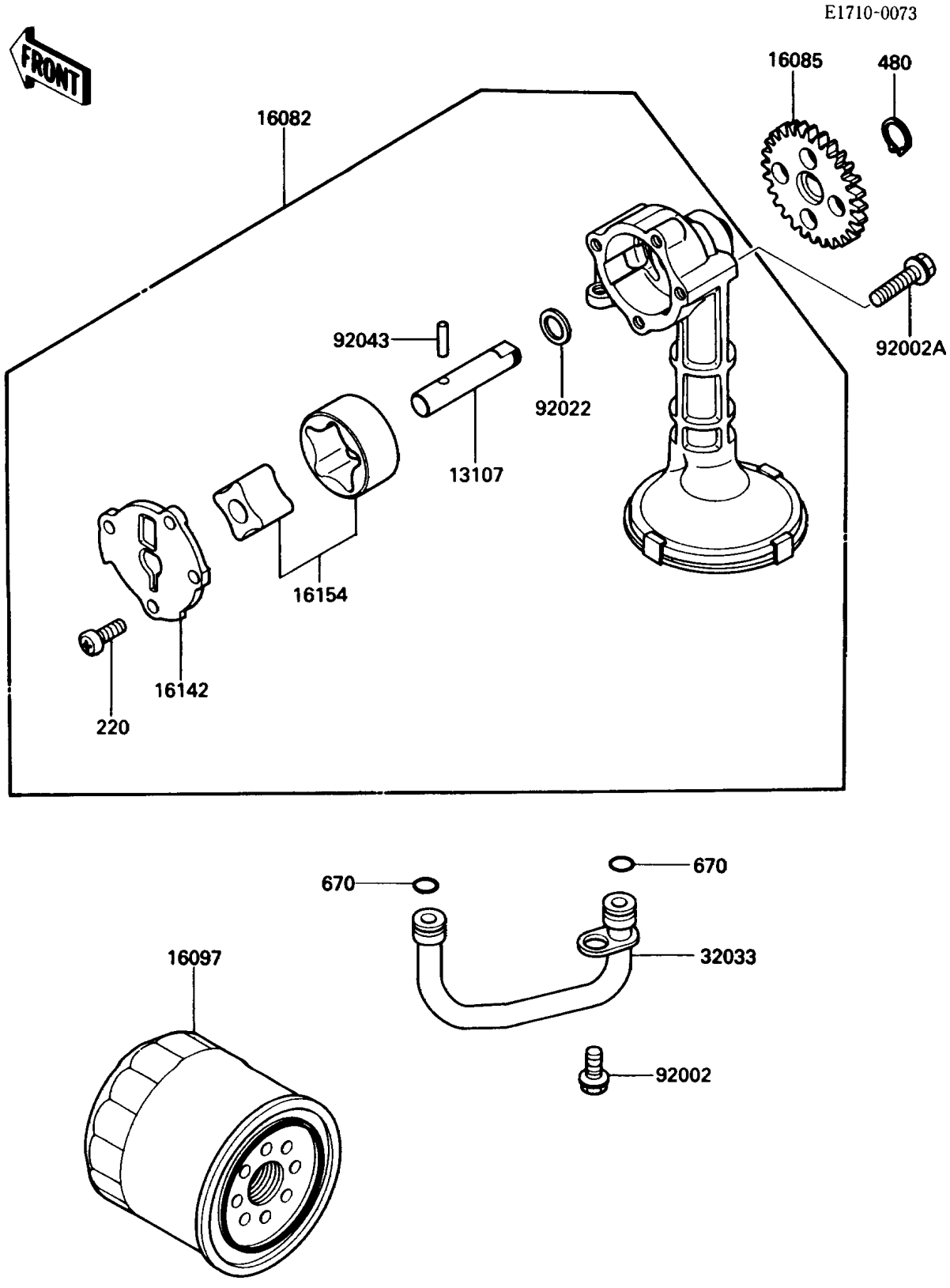

© 2026 Kawasaki Motors Corp., U.S.A.

1987 454 LTD

PARTS LIST

Oil Pump(EN450AE000001&NAMI.029479)

ITEM NAME	PART NUMBER	QUANTITY

© 2026 Kawasaki Motors Corp., U.S.A.