1988 454 LTD

PARTS DIAGRAM

Transmission

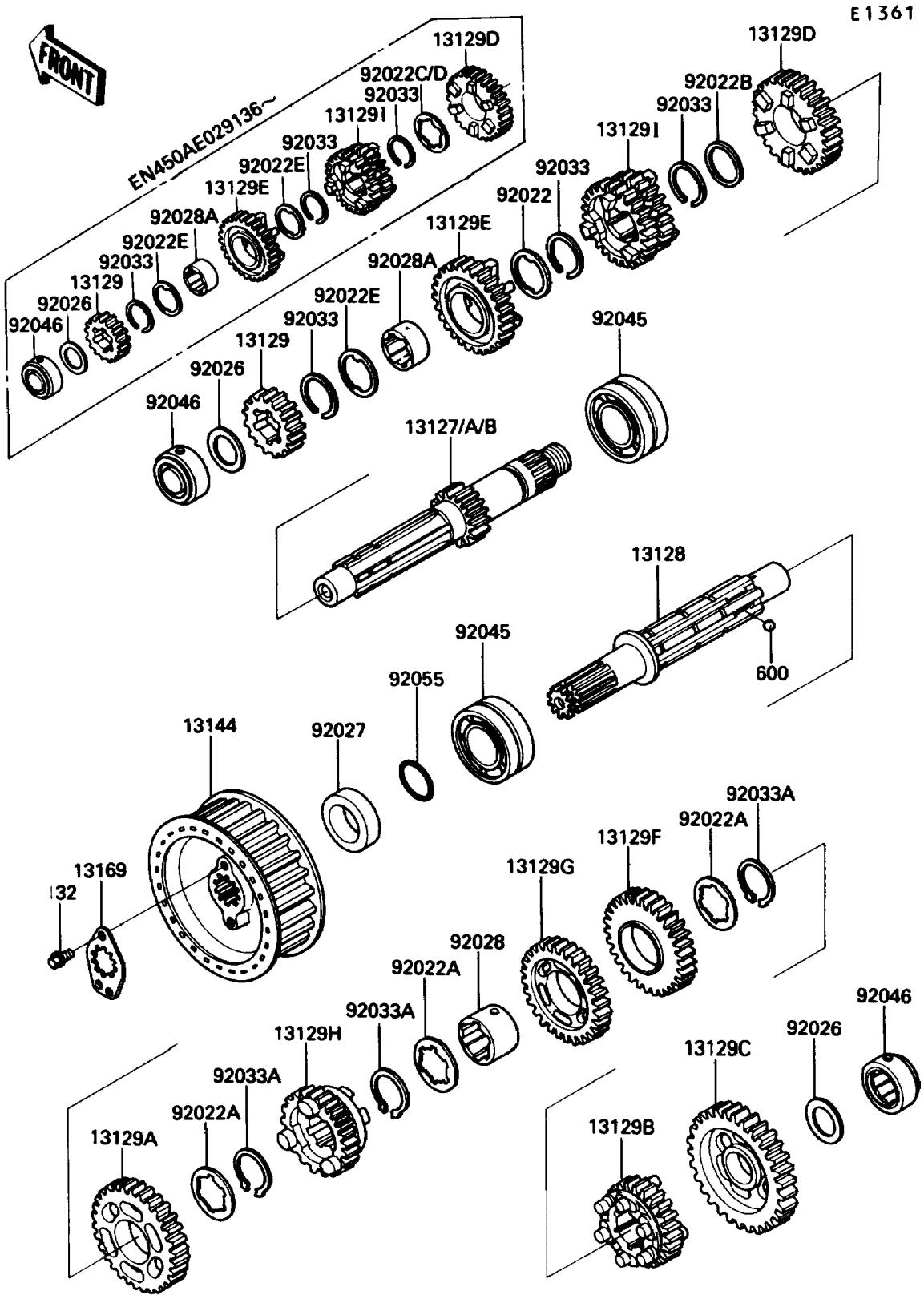

© 2026 Kawasaki Motors Corp., U.S.A.

1988 454 LTD

PARTS LIST

Transmission

ITEM NAME	PART NUMBER	QUANTITY

© 2026 Kawasaki Motors Corp., U.S.A.