2012 W800 (European)

PARTS DIAGRAM

Front Hub

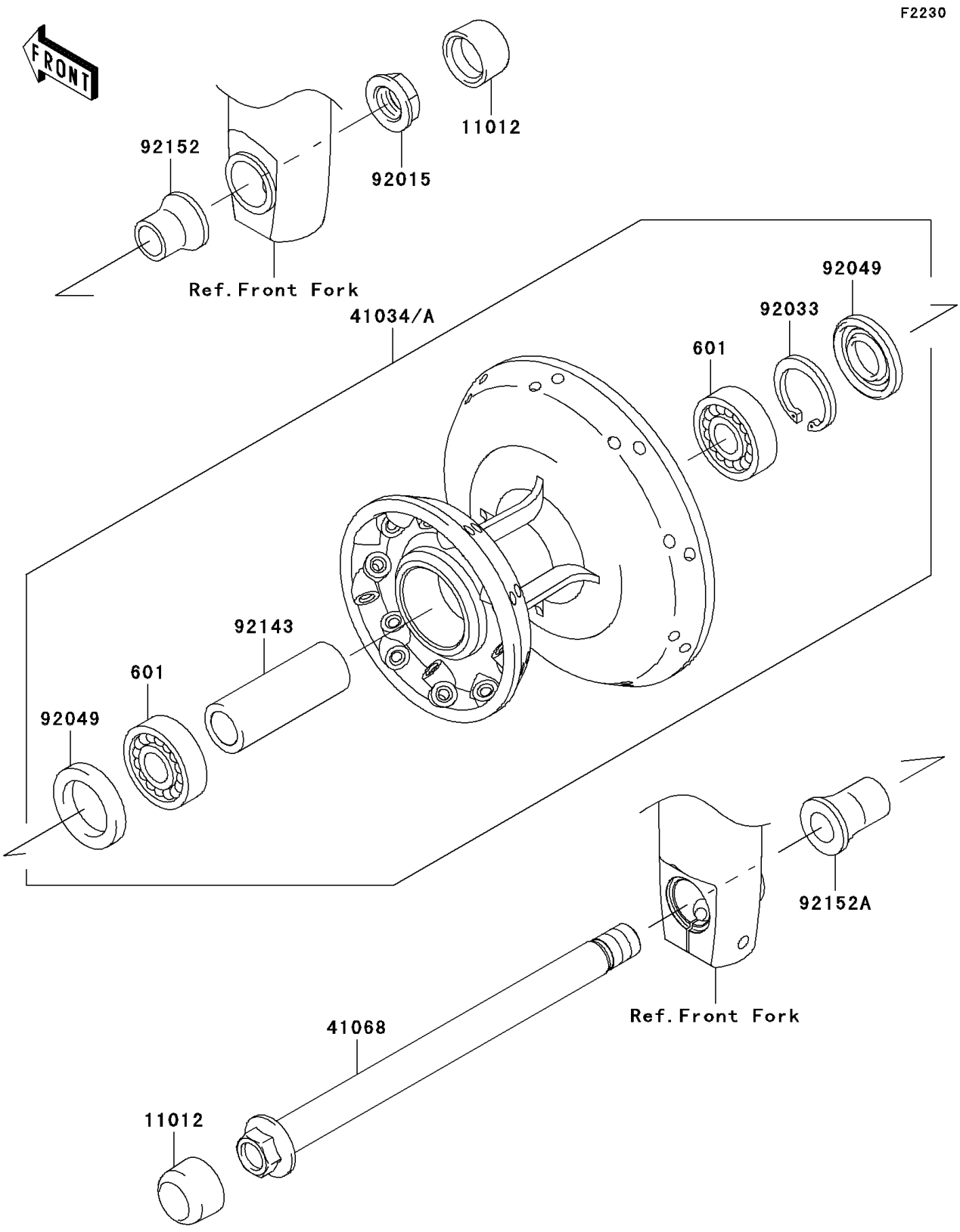

© 2026 Kawasaki Motors Corp., U.S.A.

2012 W800 (European)

PARTS LIST

Front Hub

ITEM NAME	PART NUMBER	QUANTITY
BEARING-BALL,#6203UG (Ref # 601)	601B6203UG	2
CAP,AXLE NUT (Ref # 11012)	11012-1591	2
DRUM-ASSY,FRONT BRAKE,BLACK (Ref # 41034)	41034-1322-10	1
AXLE,FR,16X232 (Ref # 41068)	41068-0086	1
NUT,16MM (Ref # 92015)	92015-1465	1
RING-SNAP,40MM (Ref # 92033)	92033-1040	1
SEAL-OIL,AG1258AO (Ref # 92049)	92049-1110	2
COLLAR,17.2X25X69 (Ref # 92143)	92143-1208	1
COLLAR,FR AXLE,RH,L=25.5 (Ref # 92152)	92152-1160	1
COLLAR,FR AXLE,LH,L=31.5 (Ref # 92152A)	92152-1307	1

© 2026 Kawasaki Motors Corp., U.S.A.