2001 W650

PARTS DIAGRAM

Brake Pedal/Torque Link

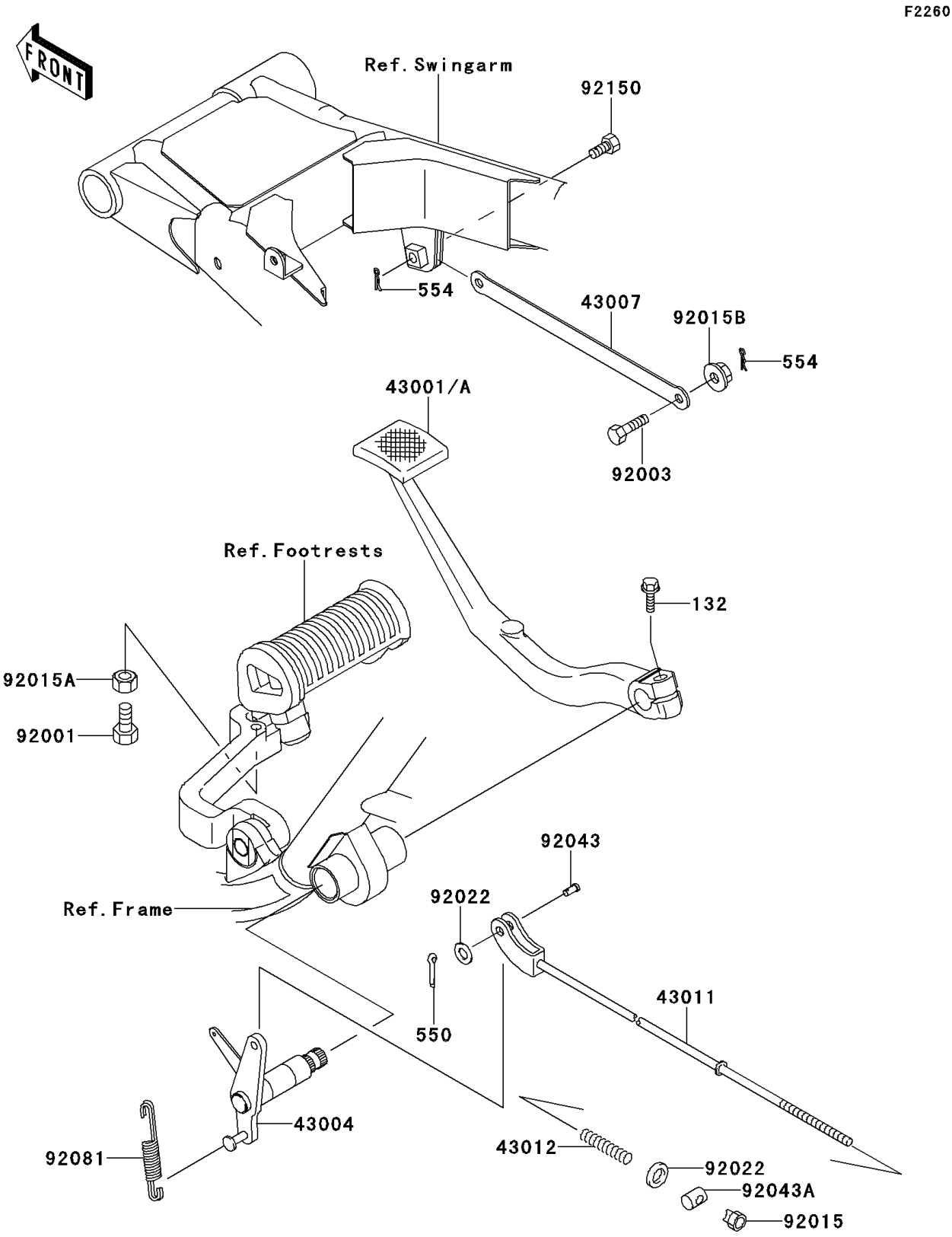

© 2026 Kawasaki Motors Corp., U.S.A.

2001 W650

PARTS LIST

Brake Pedal/Torque Link

ITEM NAME	PART NUMBER	QUANTITY
BOLT-FLANGED-SMALL (Ref # 132)	132E0825	1
PIN-COTTER,2.0X15 (Ref # 550)	550D2015	1
PIN-SNAP,8MM (Ref # 554)	554A0800	2
LEVER-BRAKE,PEDAL (Ref # 43001A)	43001-1436	1
SHAFT-BRAKE (Ref # 43004)	43004-1137	1
ROD-TORQUE (Ref # 43007)	43007-1190	1
ROD-BRAKE (Ref # 43011)	43011-1180	1
SPRING,BRAKE ROD (Ref # 43012)	43012-001	1
BOLT,6X25 (Ref # 92001)	92001-1090	1
BOLT,10X35 (Ref # 92003)	92003-034	1
NUT,BRAKE ROD (Ref # 92015)	92015-042	1
NUT,6MM (Ref # 92015A)	92015-1391	1
NUT,FLANGED,10MM (Ref # 92015B)	92015-1428	1
WASHER,6.3X10.2X1.6 (Ref # 92022)	92022-1588	2
PIN,6X17 (Ref # 92043)	92043-064	1
PIN,BRAKE ROD (Ref # 92043A)	92043-065	1
SPRING,SIDE STAND (Ref # 92081)	92081-1669	1
BOLT,10X25 (Ref # 92150)	92150-1873	1

© 2026 Kawasaki Motors Corp., U.S.A.