2001 Eliminator 125

PARTS DIAGRAM

Brake Pedal/Torque Link

F2260

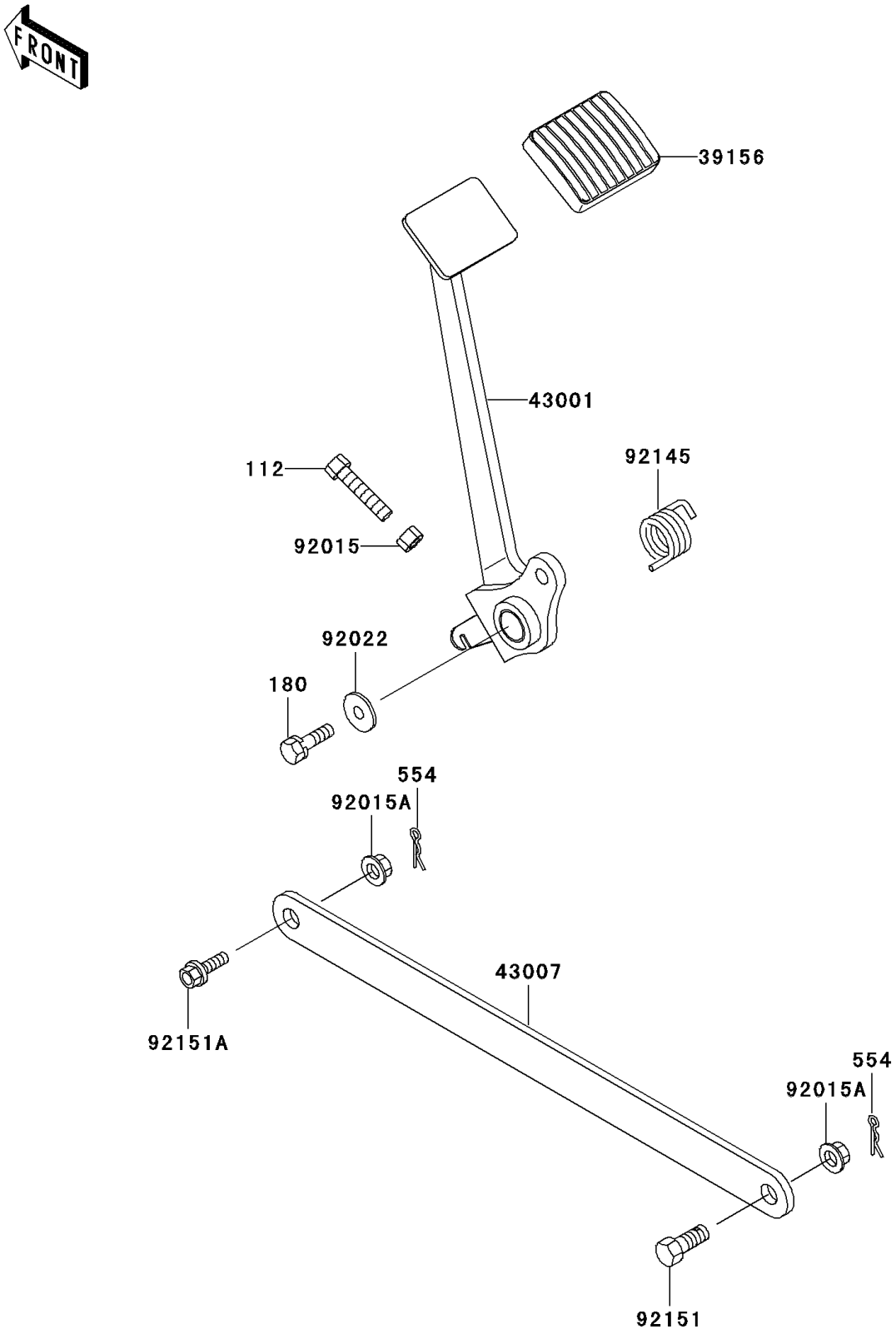

© 2026 Kawasaki Motors Corp., U.S.A.

2001 Eliminator 125

PARTS LIST

Brake Pedal/Torque Link

ITEM NAME	PART NUMBER	QUANTITY
BOLT-UPSET (Ref # 112)	112V0630	1
BOLT-UPSET-WS,6X16 (Ref # 180)	180J0616	1
PIN-SNAP,8MM (Ref # 554)	554A0800	2
PAD,BRAKE PEDAL (Ref # 39156)	39156-1071	1
LEVER-BRAKE,PEDAL (Ref # 43001)	43001-1390	1
ROD-TORQUE (Ref # 43007)	43007-1037	1
NUT,6MM (Ref # 92015)	92015-1391	1
NUT,FLANGED,10MM (Ref # 92015A)	92015-1428	2
WASHER,6.5X20X1.6,BLACK (Ref # 92022)	92022-1346	1
SPRING,BRAKE PEDAL RETURN (Ref # 92145)	92145-1072	1
BOLT,10X27 (Ref # 92151)	92151-1203	1
BOLT,FLANGED,10X25 (Ref # 92151A)	92151-1337	1

© 2026 Kawasaki Motors Corp., U.S.A.