2005 Eliminator 125

PARTS DIAGRAM

Generator

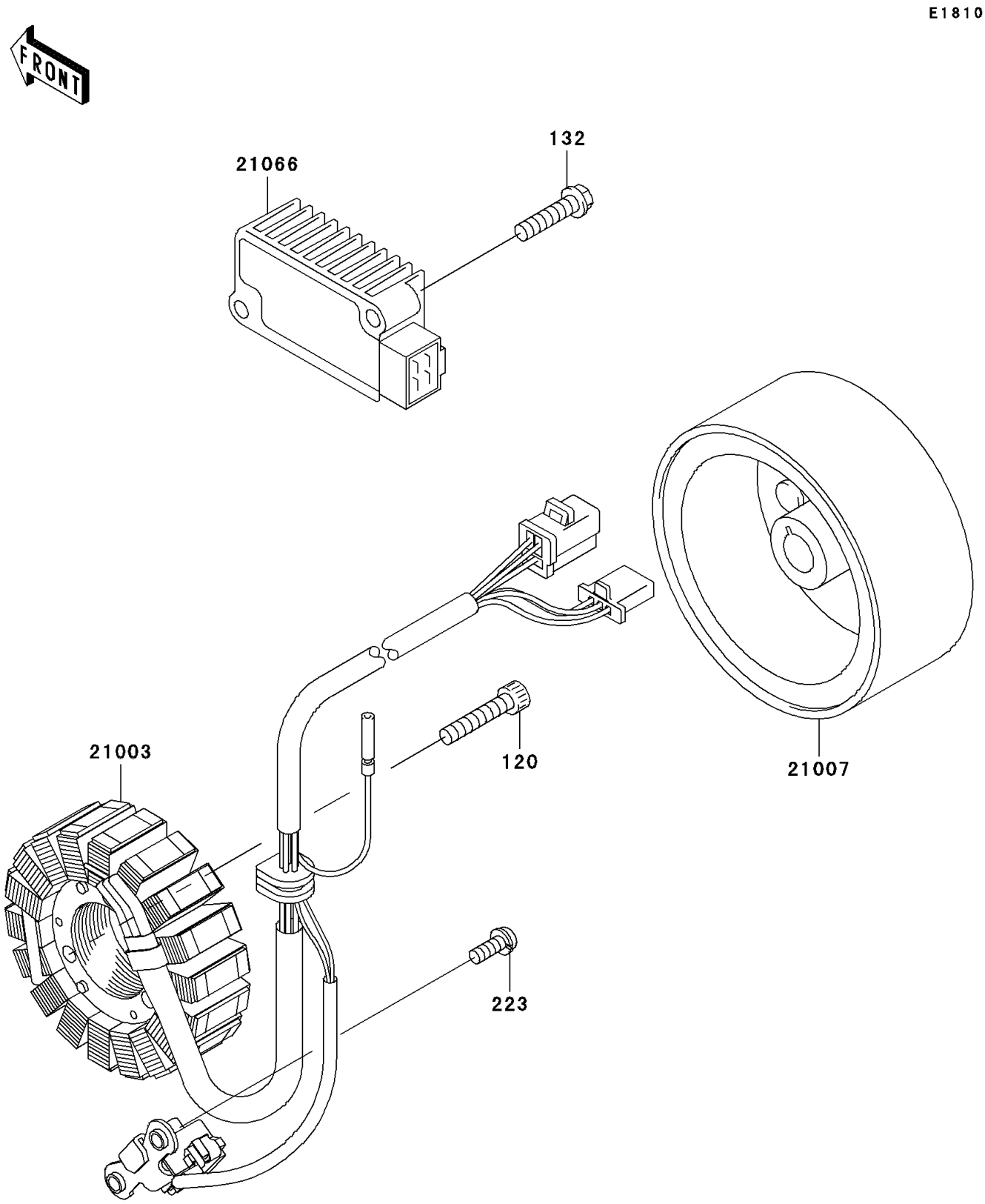

© 2026 Kawasaki Motors Corp., U.S.A.

2005 Eliminator 125

PARTS LIST

Generator

ITEM NAME	PART NUMBER	QUANTITY
BOLT-SOCKET,6X30 (Ref # 120)	120P0630	3
BOLT-FLANGED-SMALL (Ref # 132)	132J0625	2
SCREW-PAN-WS-CROS (Ref # 223)	223B0514	2
STATOR (Ref # 21003)	21003-1342	1
ROTOR (Ref # 21007)	21007-1346	1
REGULATOR-VOLTAGE (Ref # 21066)	21066-1108	1

© 2026 Kawasaki Motors Corp., U.S.A.