2012 EDGE R

PARTS DIAGRAM

Front Hub(RCF)

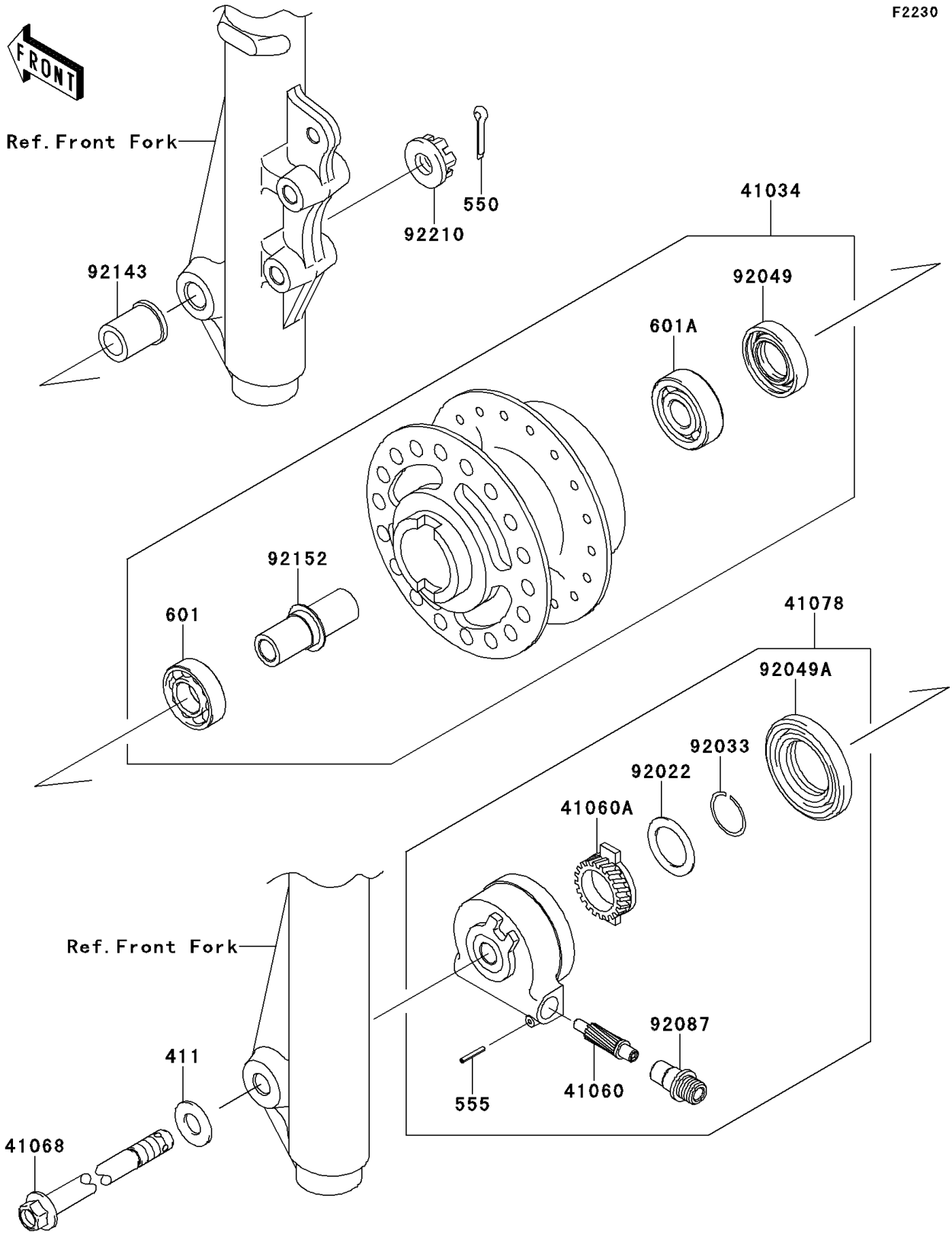

© 2026 Kawasaki Motors Corp., U.S.A.

2012 EDGE R

PARTS LIST

Front Hub(RCF)

ITEM NAME	PART NUMBER	QUANTITY
WASHER-PLAIN,10MM (Ref # 411)	411AA1000	1
PIN-COTTER,2.5X25 (Ref # 550)	550AA2525	1
PIN-SPRING (Ref # 555)	555A0214	1
BEARING-BALL,#6200UG (Ref # 601)	601B6200UG	1
BEARING-BALL (Ref # 601A)	601B6300UG	1
DRUM-ASSY,FRONT BRAKE (Ref # 41034)	41034-0553	1
GEAR-METER SCREW,10T (Ref # 41060)	41060-0571	1
GEAR-METER SCREW,25T (Ref # 41060A)	41060-0572	1
AXLE,FR (Ref # 41068)	41068-1362	1
CASE-ASSY-METER GEAR (Ref # 41078)	41078-0054	1
WASHER,20X29X1.0 (Ref # 92022)	92022-1510	1
RING-SNAP,19MM (Ref # 92033)	92033-1160	1
SEAL-OIL,DD20X35X7 (Ref # 92049)	92049-0052	1
SEAL-OIL (Ref # 92049A)	92049-0717	1
BUSHING-METER GEAR (Ref # 92087)	92087-0002	1
COLLAR,FR AXLE,L=24.5 (Ref # 92143)	92143-1847	1
COLLAR,FRONT BRAKE DRUM,L=51 (Ref # 92152)	92152-0119	1
NUT,CASTLE,10MM (Ref # 92210)	92210-1093	1

© 2026 Kawasaki Motors Corp., U.S.A.