2008 Prairie® 360 PARTS DIAGRAM

Front Hub

F2230

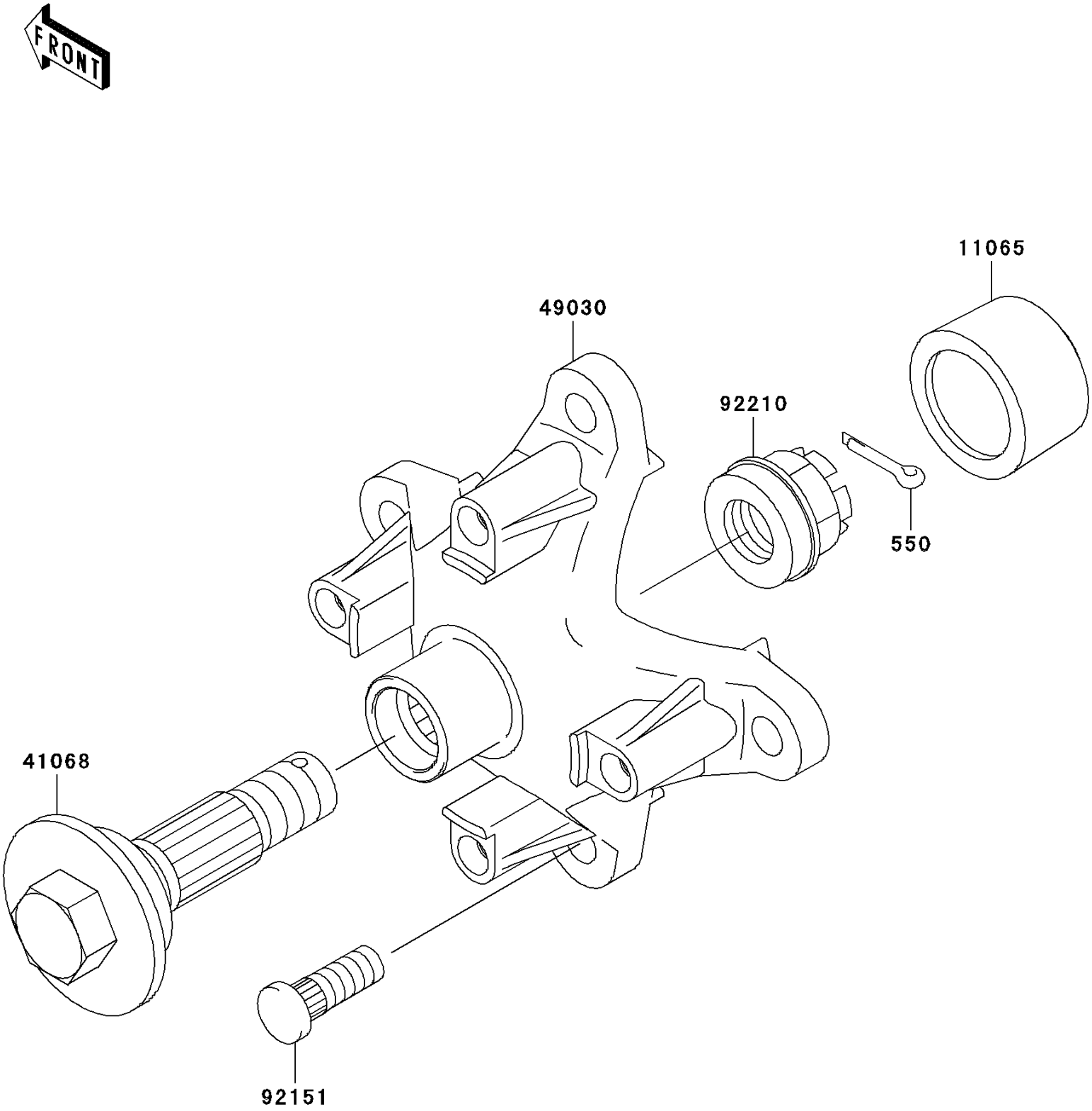

© 2024 Kawasaki Motors Corp., U.S.A.

2008 Prairie® 360 PARTS LIST

Front Hub

ITEM NAME	PART NUMBER	QUANTITY
PIN-COTTER,4.0X25 (Ref # 550)	550AA4025	2
CAP,WHEEL (Ref # 11065)	11065-1153	2
AXLE,FR (Ref # 41068)	41068-7501	2
HUB,FR (Ref # 49030)	49030-1135	2
BOLT,10X29.5 (Ref # 92151)	92151-1392	8
NUT,CASTLE,18MM (Ref # 92210)	92210-1349	2

© 2024 Kawasaki Motors Corp., U.S.A.