2014 BRUTE FORCE® 750 4x4i EPS

PARTS DIAGRAM

Fuel Pump(JDF/JEF)

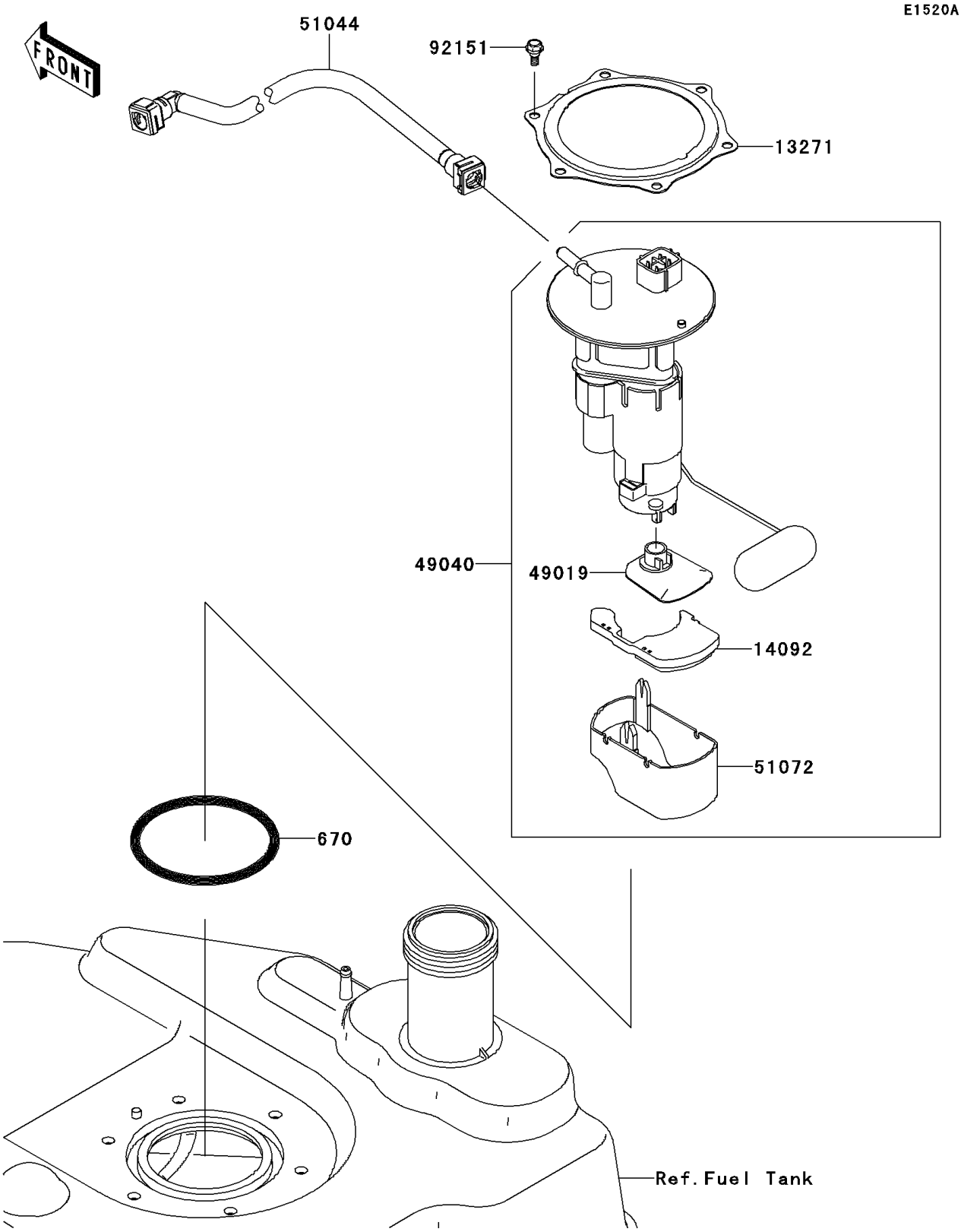

© 2026 Kawasaki Motors Corp., U.S.A.

2014 BRUTE FORCE® 750 4x4i EPS

Kawasaki
Let the Good Times Roll®

PARTS LIST

Fuel Pump(JDF/JEF)

ITEM NAME	PART NUMBER	QUANTITY
O RING (Ref # 670)	670E5090	1
PLATE (Ref # 13271)	13271-0980	1
COVER (Ref # 14092)	14092-1044	1
FILTER-FUEL (Ref # 49019)	49019-0013	1
PUMP-FUEL (Ref # 49040)	49040-0717	1
TUBE-ASSY (Ref # 51044)	51044-0041	1
CHAMBER-FUEL (Ref # 51072)	51072-0003	1
BOLT,FLANGED,5X11.5 (Ref # 92151)	92151-1754	6

© 2026 Kawasaki Motors Corp., U.S.A.