2012 MULE™ 4000 PARTS DIAGRAM

Gear Change Mechanism

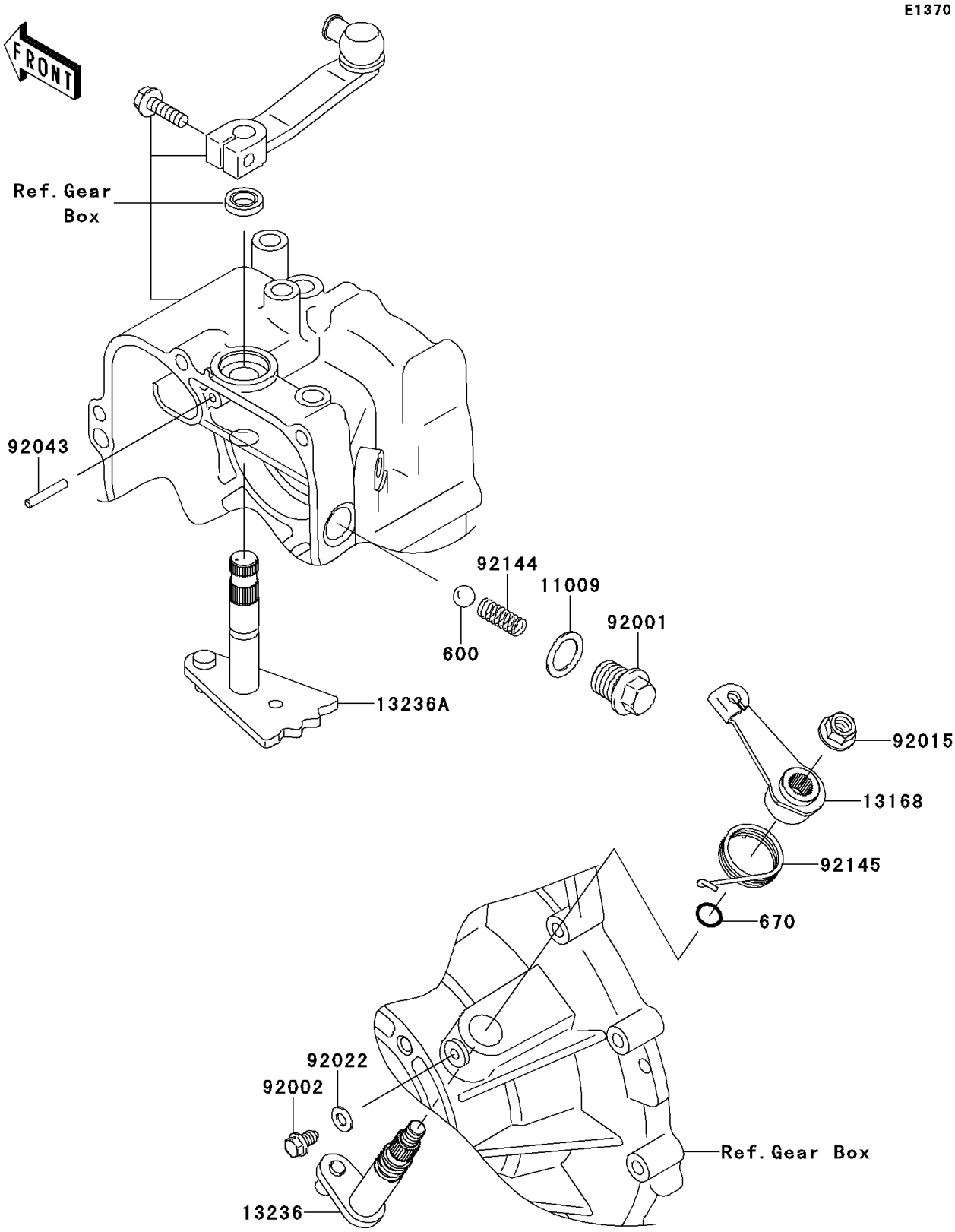

© 2024 Kawasaki Motors Corp., U.S.A.

2012 MULE™ 4000 PARTS LIST

Gear Change Mechanism

ITEM NAME	PART NUMBER	QUANTITY
BALL-STEEL,13/32" (Ref # 600)	600A1300	1
O RING,10MM (Ref # 670)	670B2010	1
GASKET,15.5X22X1 (Ref # 11009)	11009-1008	1
LEVER,DIFF LOCK (Ref # 13168)	13168-1523	1
LEVER-COMP,DIFF LOCK (Ref # 13236)	13236-1219	1
LEVER-COMP,FR/RR (Ref # 13236A)	13236-1366	1
BOLT,NEUTRAL POSITION (Ref # 92001)	92001-1037	1
BOLT,FLANGED-SMALL,6X8.1X2.5 (Ref # 92002)	92002-1962	1
NUT,FLANGED,8MM (Ref # 92015)	92015-1406	1
WASHER,6.1X12X1 (Ref # 92022)	92022-077	1
PIN (Ref # 92043)	92043-1415	1
SPRING,CHANGE LEVER,FR/RR (Ref # 92144)	92144-1702	1
SPRING (Ref # 92145)	92145-0253	1

© 2024 Kawasaki Motors Corp., U.S.A.