# 2012 VERSYS® PARTS DIAGRAM

## Chassis Electrical Equipment

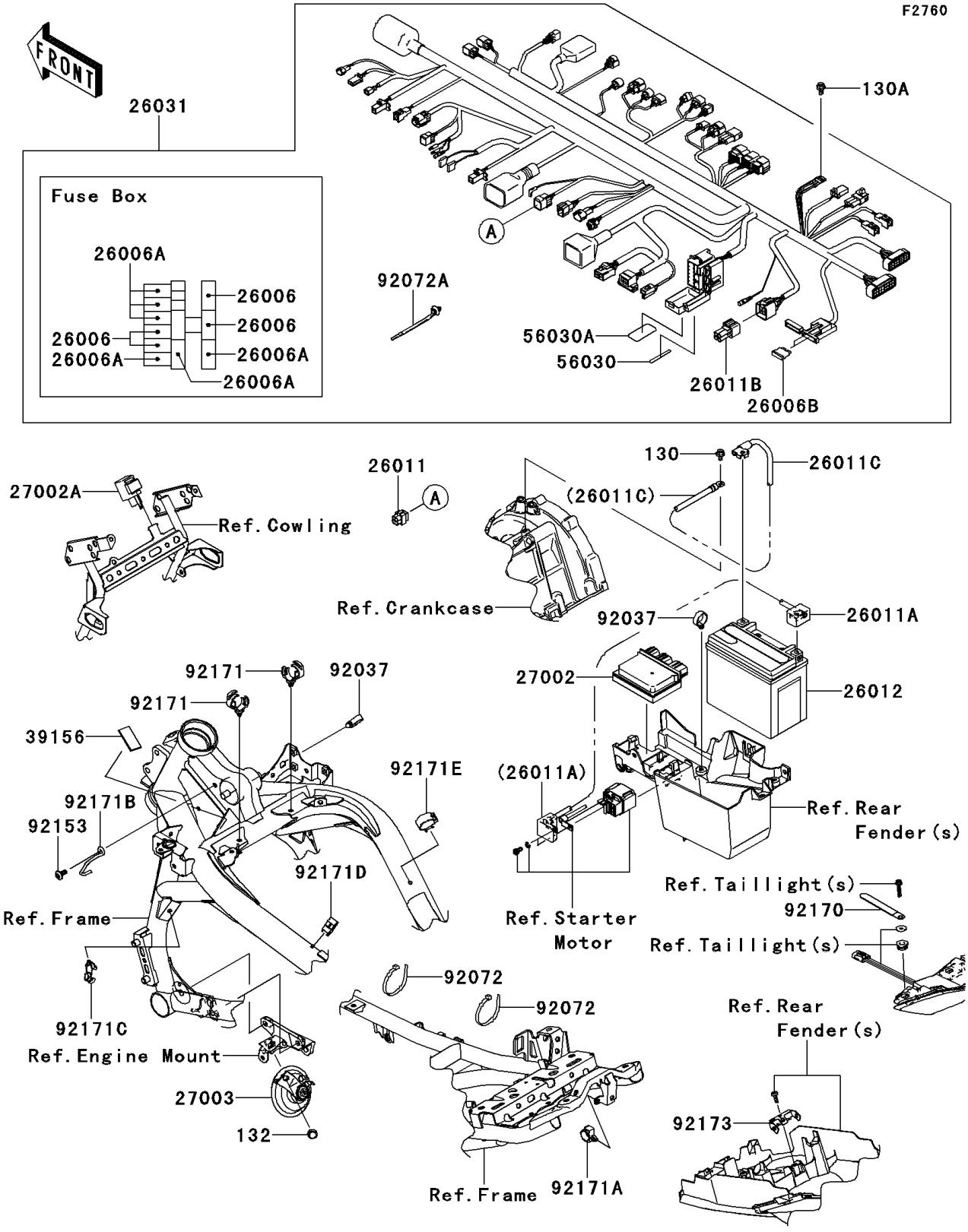


© 2024 Kawasaki Motors Corp., U.S.A.

# 2012 VERSYS® PARTS LIST

Chassis Electrical Equipment

| ITEM NAME | PART NUMBER | QUANTITY |
|---|---|---|
| BOLT-FLANGED,6X10 (Ref # 130) | 130BA0610 | 1 |
| BOLT-FLANGED,6X12 (Ref # 130A) | 130BA0612 | 1 |
| BOLT-FLANGED-SMALL,8X12 (Ref # 132) | 132BB0812 | 1 |
| FUSE,MINI BLADE,15A,BLUE (Ref # 26006) | 26006-0001 | 4 |
| FUSE,MINI BLADE,10A,RED (Ref # 26006A) | 26006-1078 | 6 |
| FUSE,BLADE,5A,TAN (Ref # 26006B) | 26006-1082 | 2 |
| WIRE-LEAD,SENSOR CONNECTOR (Ref # 26011) | 26011-0101 | 1 |
| WIRE-LEAD,BATTERY(+) (Ref # 26011A) | 26011-0247 | 1 |
| WIRE-LEAD,CAP (Ref # 26011B) | 26011-0271 | 1 |
| WIRE-LEAD,BATTERY(-) (Ref # 26011C) | 26011-0301 | 1 |
| BATTERY,FTX12-BS,12V 10AH (Ref # 26012) | 26012-0109 | 1 |
| HARNESS,MAIN (Ref # 26031) | 26031-0956 | 1 |
| RELAY-ASSY (Ref # 27002) | 27002-0007 | 1 |
| RELAY-ASSY,SIGNAL LAMP (Ref # 27002A) | 27002-1097 | 1 |
| HORN (Ref # 27003) | 27003-0076 | 1 |
| PAD,20X40X3 (Ref # 39156) | 39156-0831 | 1 |
| LABEL,FUSE BOX (Ref # 56030) | 56030-0360 | 1 |
| LABEL,FUSE BOX (Ref # 56030A) | 56030-0419 | 1 |
| CLAMP,HOSE (Ref # 92037) | 92037-1827 | 2 |
| BAND,L=365 (Ref # 92072) | 92072-1197 | 2 |
| BAND (Ref # 92072A) | 92072-1414 | 15 |
| BOLT,SOCKET,6X14 (Ref # 92153) | 92153-1446 | 1 |
| CLAMP (Ref # 92170) | 92170-1925 | 1 |
| CLAMP,DIA=20 (Ref # 92171) | 92171-0069 | 2 |
| CLAMP,BRAKE HOSE (Ref # 92171A) | 92171-0316 | 1 |
| CLAMP,HARNESS (Ref # 92171B) | 92171-0657 | 1 |
| CLAMP,DIA=13 (Ref # 92171C) | 92171-1415 | 1 |
| CLAMP,DIA=15 (Ref # 92171D) | 92171-1424 | 1 |
| CLAMP,DIA=25 (Ref # 92171E) | 92171-1559 | 1 |

© 2024 Kawasaki Motors Corp., U.S.A.

# 2012 VERSYS® PARTS LIST

## Chassis Electrical Equipment

| ITEM NAME | PART NUMBER | QUANTITY |
|---|---|---|
| CLAMP,FUSE BOX (Ref # 92173) | 92173-0218 | 1 |

© 2024 Kawasaki Motors Corp., U.S.A.