2007 Vulcan 1500 Classic PARTS DIAGRAM

Owner's Tools

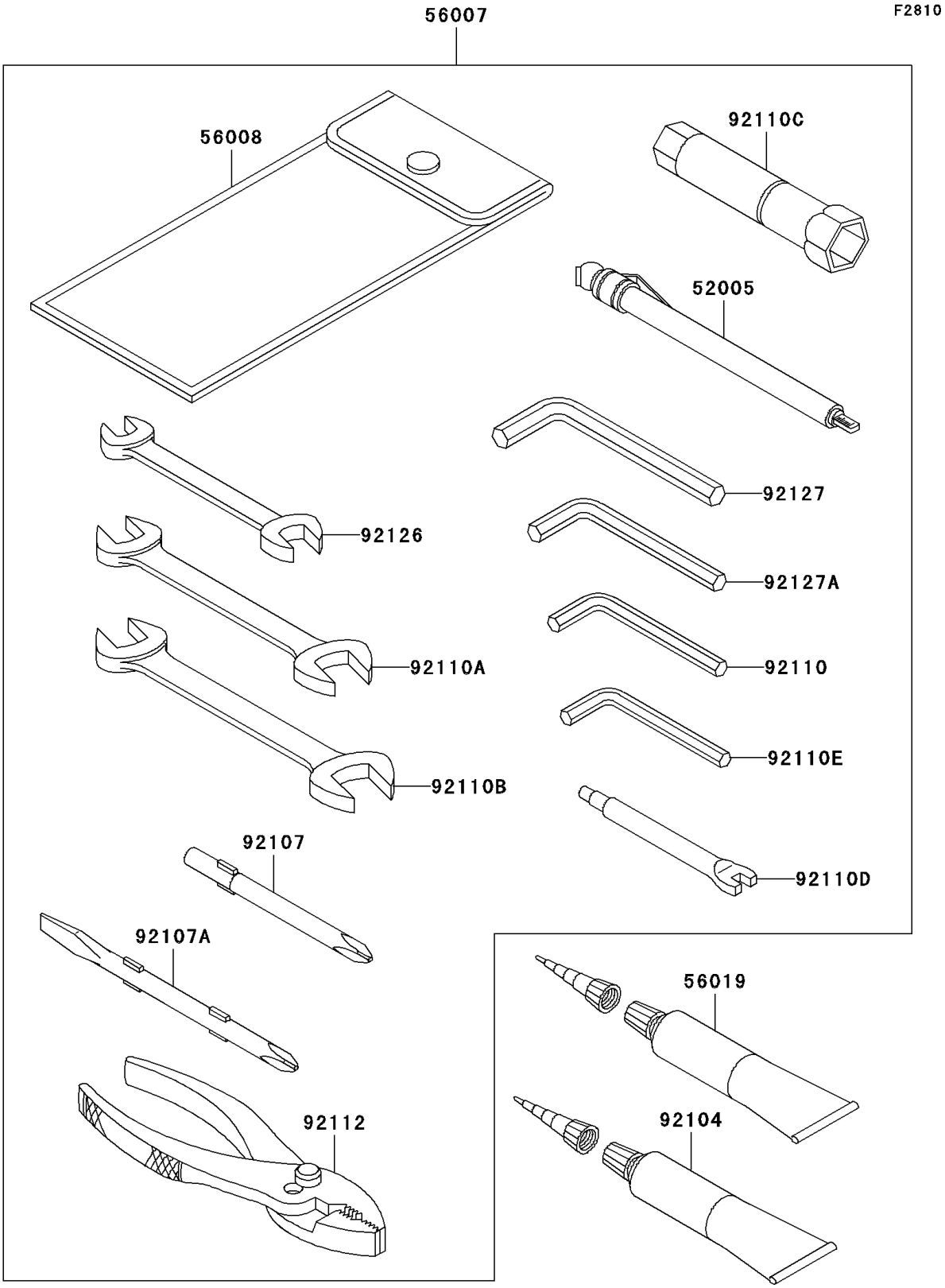

© 2024 Kawasaki Motors Corp., U.S.A.

2007 Vulcan 1500 Classic PARTS LIST

Owner's Tools

ITEM NAME	PART NUMBER	QUANTITY
GAUGE,AIR,350KPA/50PSI (Ref # 52005)	52005-1142	1
TOOL-KIT (Ref # 56007)	56007-1466	1
BAG,TOOL (Ref # 56008)	56008-006	1
THREE BOND TB1211,HT/RS,WHITE (Ref # 56019)	56019-120	1
GASKET-LIQUID,BLACK,TB1105 (Ref # 92104)	92104-1003	1
TOOL-DRIVER,#3PHILLIPS (Ref # 92107)	92107-1002	1
TOOL-DRIVER,#2PHILLIPS&SLOT (Ref # 92107A)	92107-1052	1
TOOL-WRENCH,ALLEN,5MM (Ref # 92110)	92110-1015	1
TOOL-WRENCH,OPEN END,10X12 (Ref # 92110A)	92110-1038	1
TOOL-WRENCH,OPEN END,14X17 (Ref # 92110B)	92110-1045	1
TOOL-WRENCH,BOX,18MM&DRIVER HA (Ref # 92110C)	92110-1135	1
TOOL-WRENCH,SPOKE (Ref # 92110D)	92110-1136	1
TOOL-WRENCH,ALLEN,4MM (Ref # 92110E)	92110-3703	1
TOOL-PLIERS (Ref # 92112)	92112-003	1
TOOL-WRENCH,OPEN END,8X10 (Ref # 92126)	92126-001	1
TOOL-WRENCH,ALLEN,8MM (Ref # 92127)	92127-002	1
TOOL-WRENCH,ALLEN,6MM (Ref # 92127A)	92127-003	1

© 2024 Kawasaki Motors Corp., U.S.A.