2009 Mule 4010 4x4 PARTS DIAGRAM

Cylinder Head

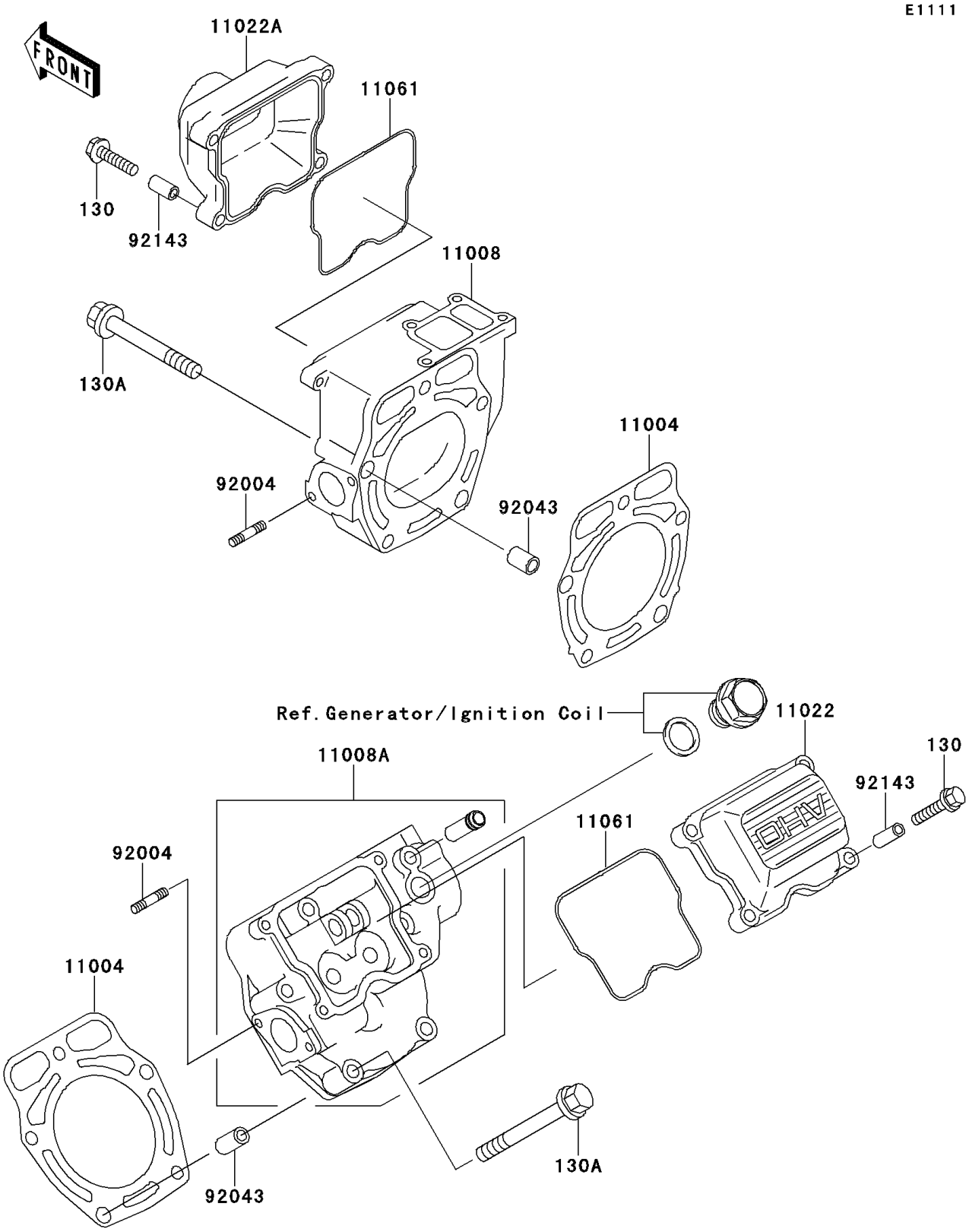

© 2024 Kawasaki Motors Corp., U.S.A.

2009 Mule 4010 4x4 PARTS LIST

Cylinder Head

ITEM NAME	PART NUMBER	QUANTITY
BOLT-FLANGED,6X25 (Ref # 130)	130AA0625	8
BOLT-FLANGED,8X65 (Ref # 130A)	130BA0865	10
GASKET-HEAD (Ref # 11004)	11004-2107	2
HEAD-COMP-CYLINDER (Ref # 11008)	11008-2139	1
HEAD-COMP-CYLINDER (Ref # 11008A)	11008-6033	1
CASE-ROCKER (Ref # 11022)	11022-2056	1
CASE-ROCKER (Ref # 11022A)	11022-2068	1
GASKET,ROCKER CASE (Ref # 11061)	11061-2182	2
STUD,6X20 (Ref # 92004)	92004-2142	4
PIN,DOWEL,10X14 (Ref # 92043)	92043-1037	4
COLLAR (Ref # 92143)	92143-2010	8

© 2024 Kawasaki Motors Corp., U.S.A.