2014 KX™65 PARTS DIAGRAM

Rear Brake

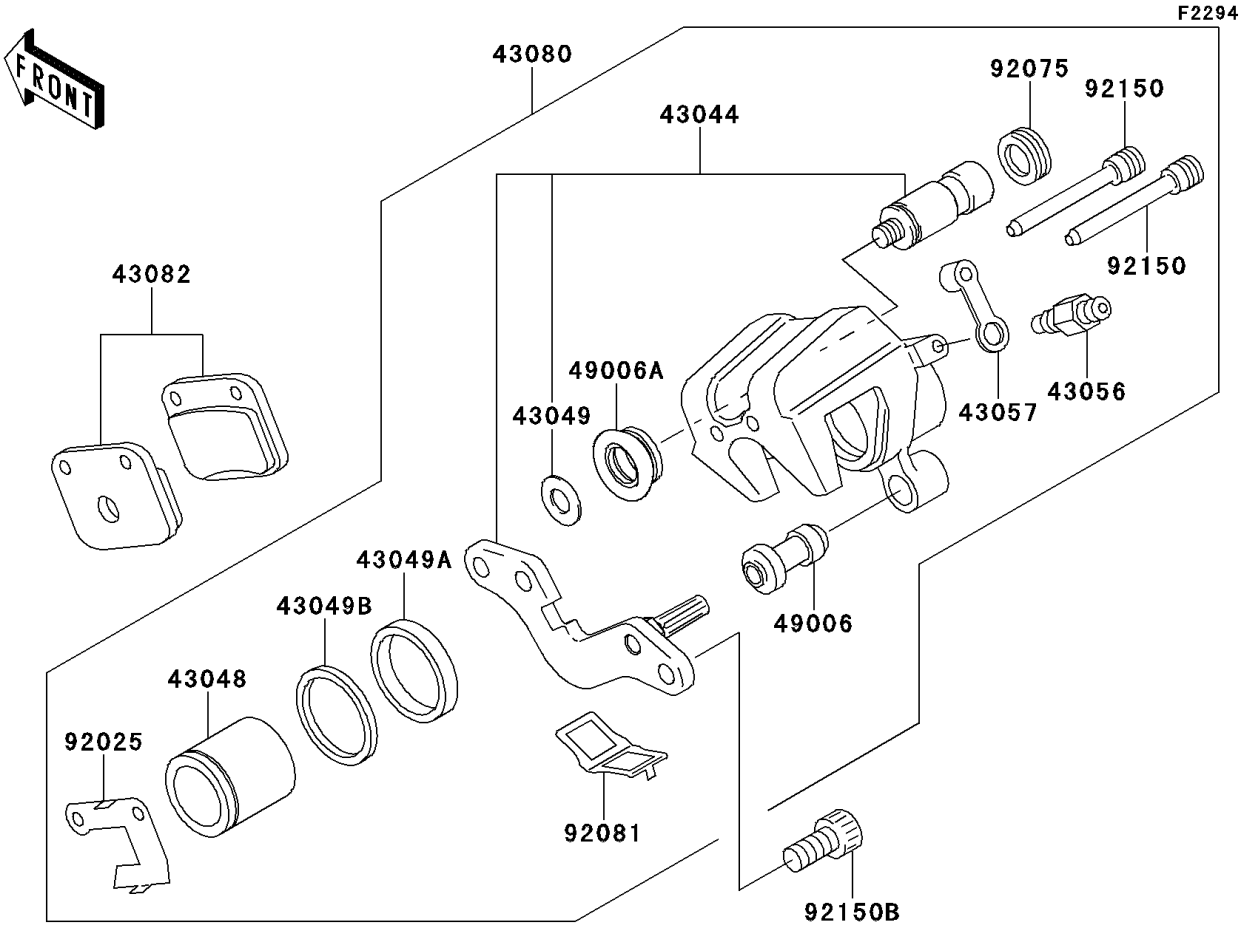

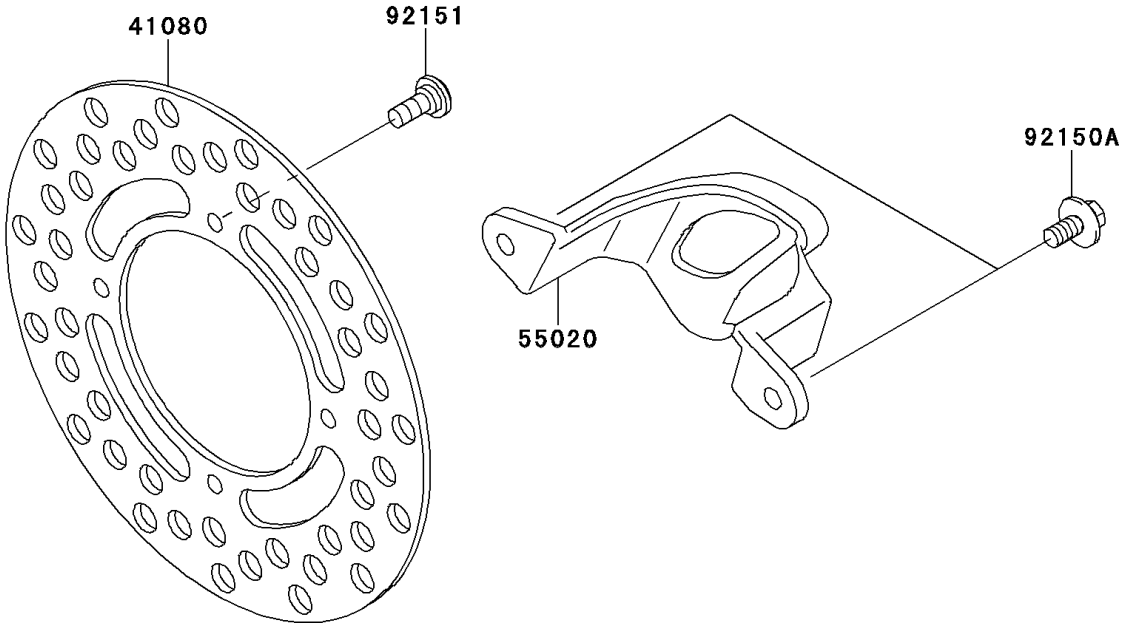

© 2025 Kawasaki Motors Corp., U.S.A.

2014 KX™65 PARTS LIST

Rear Brake

ITEM NAME	PART NUMBER	QUANTITY
DISC (Ref # 41080)	41080-1470	1
HOLDER-COMP-CALIPER,RR (Ref # 43044)	43044-1076	1
PISTON-CALIPER (Ref # 43048)	43048-1090	1
PACKING (Ref # 43049)	43049-1025	1
PACKING,PISTON SEAL (Ref # 43049A)	43049-1060	1
PACKING,PISTON SEAL (Ref # 43049B)	43049-1061	1
BREATHER (Ref # 43056)	43056-1055	1
CAP-BREATHER (Ref # 43057)	43057-1001	1
CALIPER-SUB-ASSY,RR (Ref # 43080)	43080-0036	1
PAD-ASSY-BRAKE (Ref # 43082)	43082-0043	1
BOOT,CALIPER (Ref # 49006)	49006-1088	1
BOOT,CALIPER (Ref # 49006A)	49006-1089	1
GUARD,REAR CALIPER,BLACK (Ref # 55020)	55020-1707-6D	1
SHIM,PAD (Ref # 92025)	92025-1817	1
DAMPER (Ref # 92075)	92075-1414	1
SPRING,PAD (Ref # 92081)	92081-1502	1
BOLT (Ref # 92150)	92150-1144	2
BOLT,6X14 (Ref # 92150A)	92150-1340	2
BOLT,SOCKET,8X16 (Ref # 92150B)	92150-1840	2
BOLT,DISC PLATE,6MM (Ref # 92151)	92151-1799	4

© 2025 Kawasaki Motors Corp., U.S.A.