2011 BRUTE FORCE® 650 4x4i PARTS DIAGRAM

Front Master Cylinder

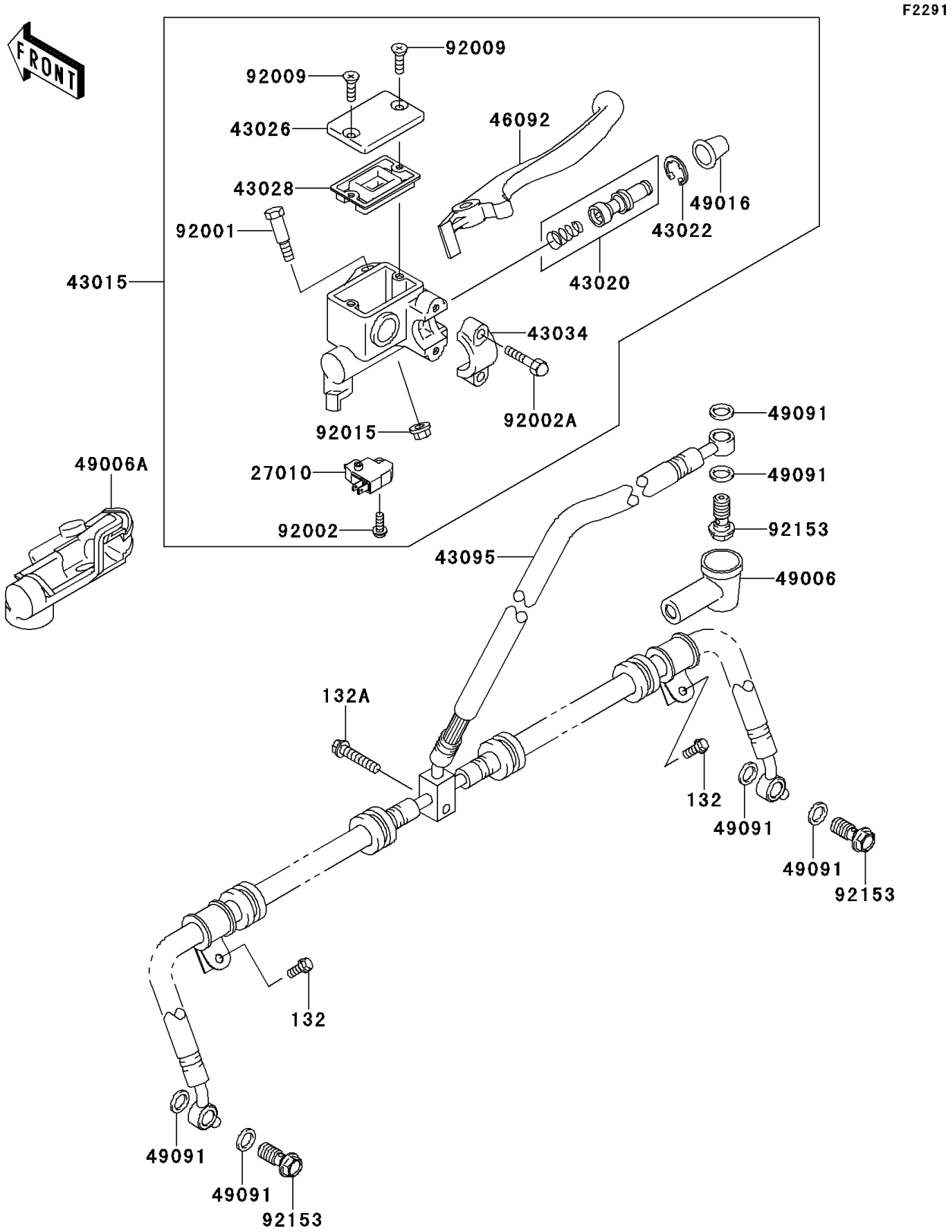

© 2025 Kawasaki Motors Corp., U.S.A.

2011 BRUTE FORCE® 650 4x4i PARTS LIST

Front Master Cylinder

ITEM NAME	PART NUMBER	QUANTITY
BOLT-FLANGED-SMALL,5X12 (Ref # 132)	132BA0512	2
BOLT-FLANGED-SMALL,6X30 (Ref # 132A)	132BA0630	1
SWITCH,BRAKE (Ref # 27010)	27010-0025	1
CYLINDER-ASSY-MASTER,FR (Ref # 43015)	43015-0036	1
PISTON-COMP-BRAKE,FR (Ref # 43020)	43020-1054	1
STOPPER-BRAKE,PISTON (Ref # 43022)	43022-1010	1
CAP-BRAKE (Ref # 43026)	43026-1074	1
DIAPHRAGM (Ref # 43028)	43028-1061	1
HOLDER-BRAKE,MASTER CYLINDER (Ref # 43034)	43034-1016	1
HOSE-BRAKE,FR (Ref # 43095)	43095-0078	1
LEVER-GRIP,FRONT BRAKE (Ref # 46092)	46092-1208	1
BOOT,DUST (Ref # 49006)	49006-1040	1
BOOT (Ref # 49006A)	49006-1338	1
COVER-SEAL,MASTER CYLINDER (Ref # 49016)	49016-1044	1
WASHER-SEAL,10.1X14.5X1.5 (Ref # 49091)	49091-0001	6
BOLT,FRONT BRAKE LEVER (Ref # 92001)	92001-1728	1
BOLT,SCREW,4X12 (Ref # 92002)	92002-1323	1
BOLT (Ref # 92002A)	92002-1894	2
SCREW,4MM (Ref # 92009)	92009-1458	2
NUT,FLANGED,6MM (Ref # 92015)	92015-1528	1
BOLT,OIL,L=23 (Ref # 92153)	92153-0627	3

© 2025 Kawasaki Motors Corp., U.S.A.