# 2011 BRUTE FORCE® 650 4x4i PARTS DIAGRAM

Frame

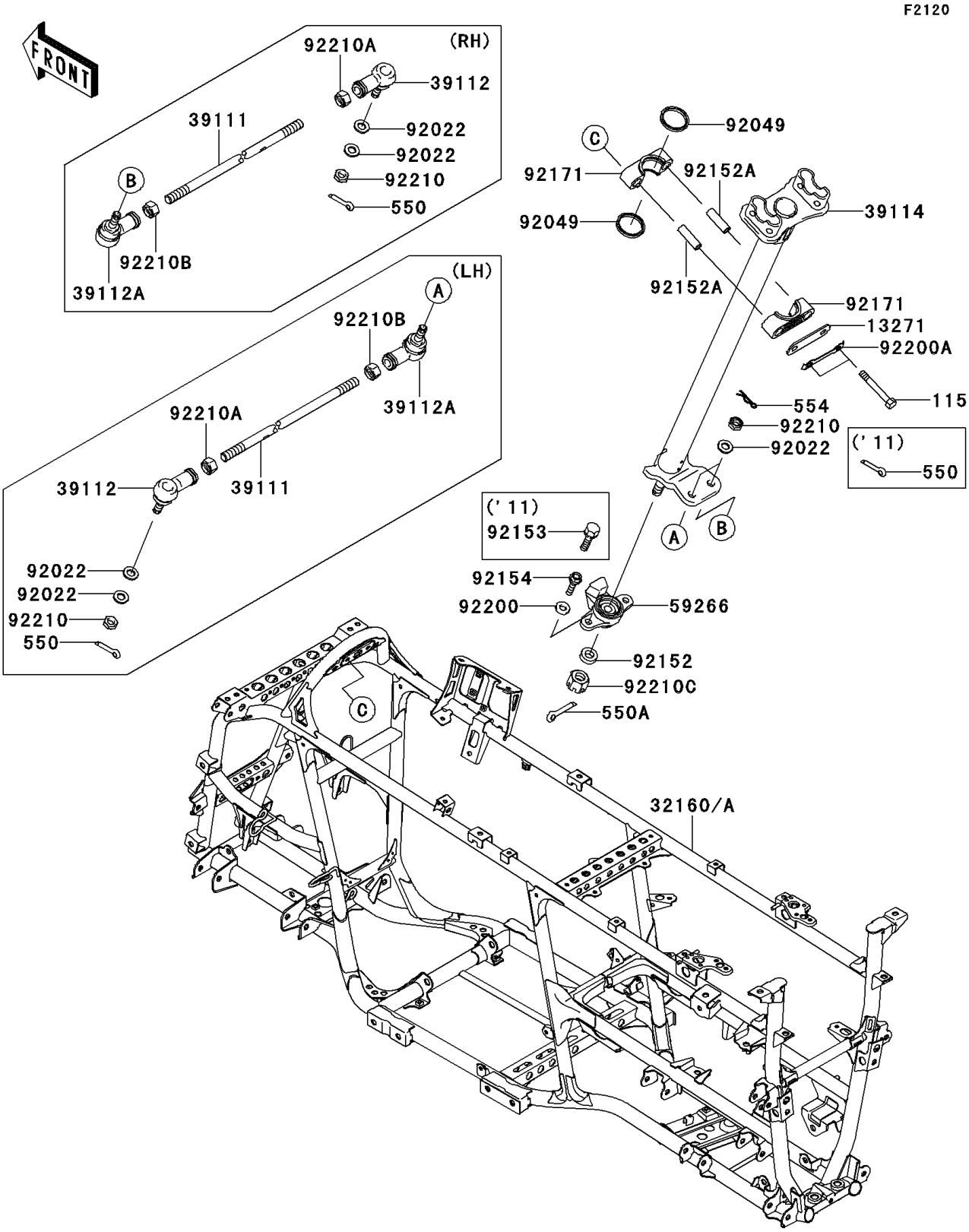


© 2025 Kawasaki Motors Corp., U.S.A.

# 2011 BRUTE FORCE® 650 4x4i PARTS LIST

Frame

| ITEM NAME | PART NUMBER | QUANTITY |
|---|---|---|
| BOLT-SMALL-UPSET,8X55 (Ref # 115) | 115CB0855 | 2 |
| PIN-COTTER,2.0X15 (Ref # 550) | 550AA2015 | 4 |
| PIN-COTTER,3.0X25 (Ref # 550A) | 550AA3025 | 1 |
| PLATE,STEERING,CLAMP (Ref # 13271) | 13271-7506 | 1 |
| FRAME-COMP (Ref # 32160) | 32160-0227 | 1 |
| ROD-TIE (Ref # 39111) | 39111-0023 | 2 |
| RODEND-TIE,RIGHT HANDED (Ref # 39112) | 39112-0009 | 2 |
| RODEND-TIE,LEFT HANDED (Ref # 39112A) | 39112-0010 | 2 |
| SHAFT-COMP-STRG (Ref # 39114) | 39114-0006 | 1 |
| JOINT-BALL (Ref # 59266) | 59266-1125 | 1 |
| WASHER,10.2X20X1.5 (Ref # 92022) | 92022-3742 | 6 |
| SEAL-OIL,SR31.8X37.5X3.8LR (Ref # 92049) | 92049-7501 | 2 |
| COLLAR,12X21.3X7 (Ref # 92152) | 92152-1351 | 1 |
| COLLAR,9.1X13.95X42 (Ref # 92152A) | 92152-7501 | 2 |
| BOLT,8X30 (Ref # 92153) | 92153-1065 | 2 |
| CLAMP,STEERING (Ref # 92171) | 92171-7501 | 2 |
| WASHER,STEERING CLAMP (Ref # 92200A) | 92200-0384 | 1 |
| NUT,LOCK,10MM (Ref # 92210) | 92210-1184 | 4 |
| NUT,RIGHT HANDED (Ref # 92210A) | 92210-1385 | 2 |
| NUT,LEFT HANDED (Ref # 92210B) | 92210-1386 | 2 |
| NUT,12MM (Ref # 92210C) | 92210-7501 | 1 |

© 2025 Kawasaki Motors Corp., U.S.A.