2009 KLX®110

PARTS DIAGRAM

Air Cleaner

Kawasaki
Let the Good Times Roll®

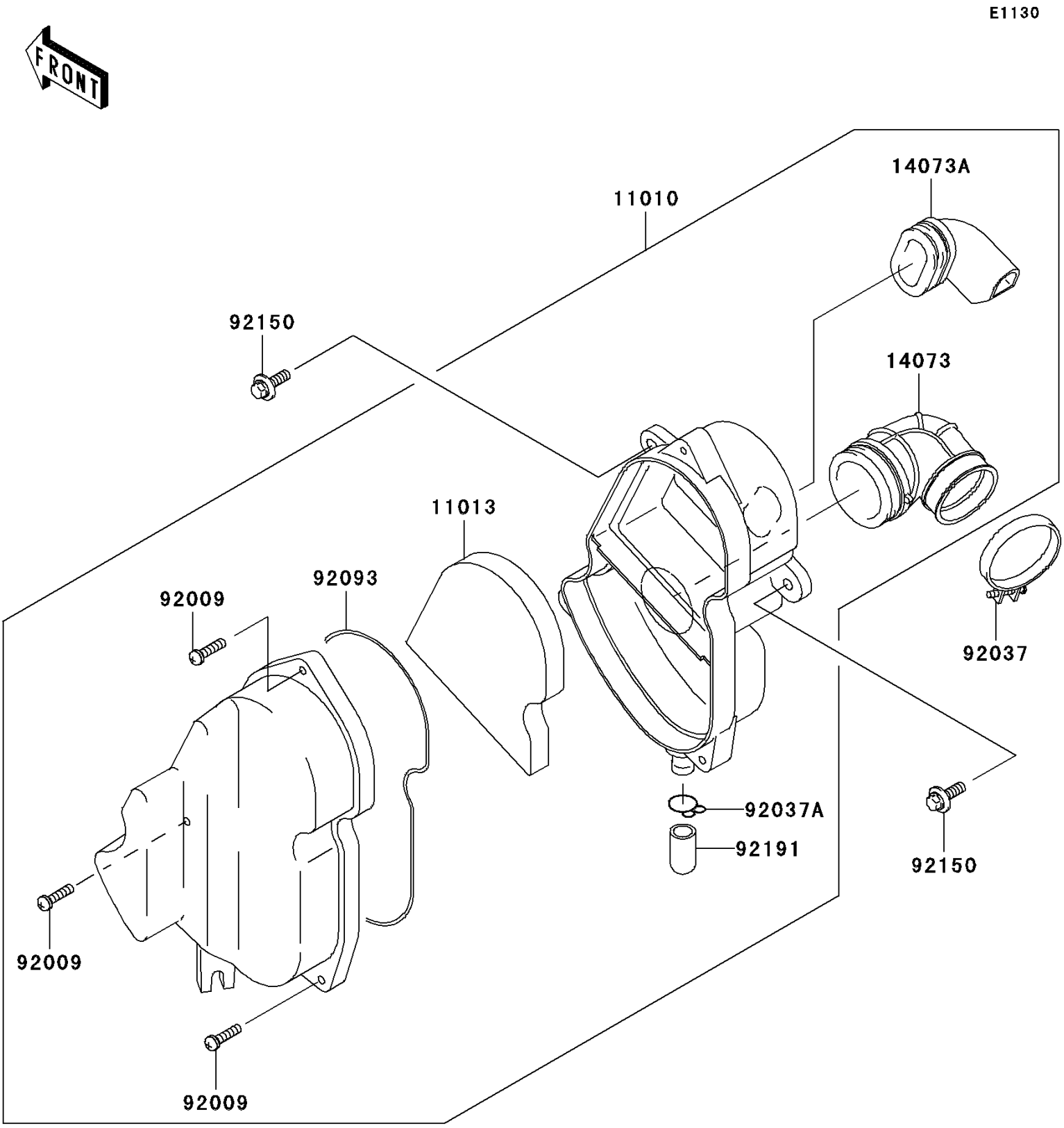

© 2026 Kawasaki Motors Corp., U.S.A.

2009 KLX®110

PARTS LIST

Air Cleaner

ITEM NAME	PART NUMBER	QUANTITY
FILTER-ASSY-AIR (Ref # 11010)	11010-1773	1
ELEMENT-AIR FILTER (Ref # 11013)	11013-1294	1
DUCT,CARBURETOR (Ref # 14073)	14073-1819	1
DUCT,IN (Ref # 14073A)	14073-1820	1
SCREW,M5X20 (Ref # 92009)	92009-1990	3
CLAMP (Ref # 92037)	92037-1305	1
CLAMP,14.5MM (Ref # 92037A)	92037-1900	1
SEAL,AIR CLEANER (Ref # 92093)	92093-1560	1
BOLT,FLANGED,6X20 (Ref # 92150)	92150-1339	2
TUBE (Ref # 92191)	92191-1704	1

© 2026 Kawasaki Motors Corp., U.S.A.