2011 BRUTE FORCE® 650 4x4

PARTS DIAGRAM

Footrests

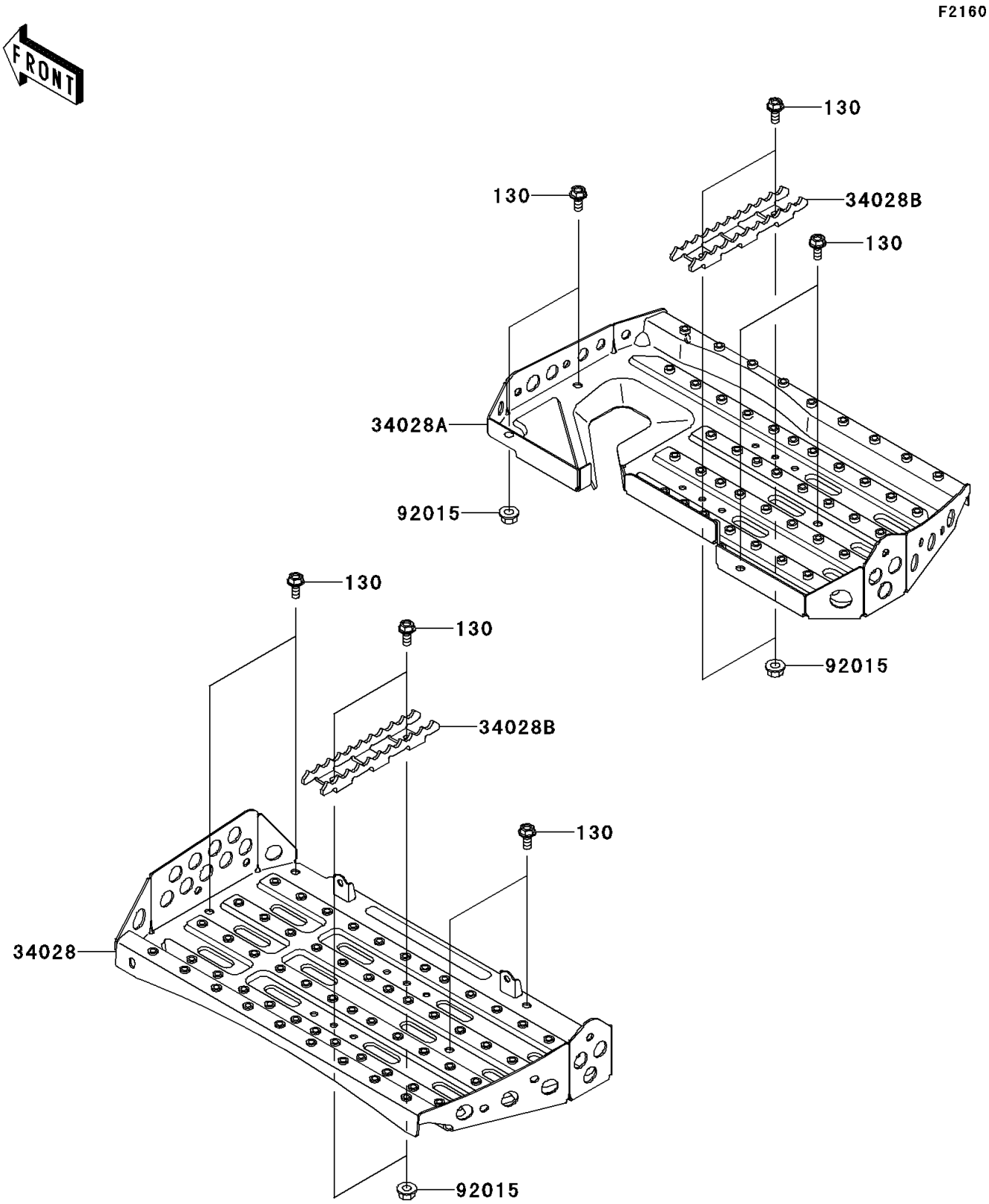

© 2026 Kawasaki Motors Corp., U.S.A.

2011 BRUTE FORCE® 650 4x4

PARTS LIST

Footrests

ITEM NAME	PART NUMBER	QUANTITY
BOLT-FLANGED,6X14 (Ref # 130)	130BB0614	12
STEP,LH,T.BLACK (Ref # 34028)	34028-0061-388	1
STEP,RH,T.BLACK (Ref # 34028A)	34028-0062-388	1
STEP,FOOT PEG,T.BLACK (Ref # 34028B)	34028-0063-388	2
NUT,FLANGED,6MM (Ref # 92015)	92015-1367	5

© 2026 Kawasaki Motors Corp., U.S.A.