# 2011 CONCOURS® 14 ABS PARTS DIAGRAM

Cables

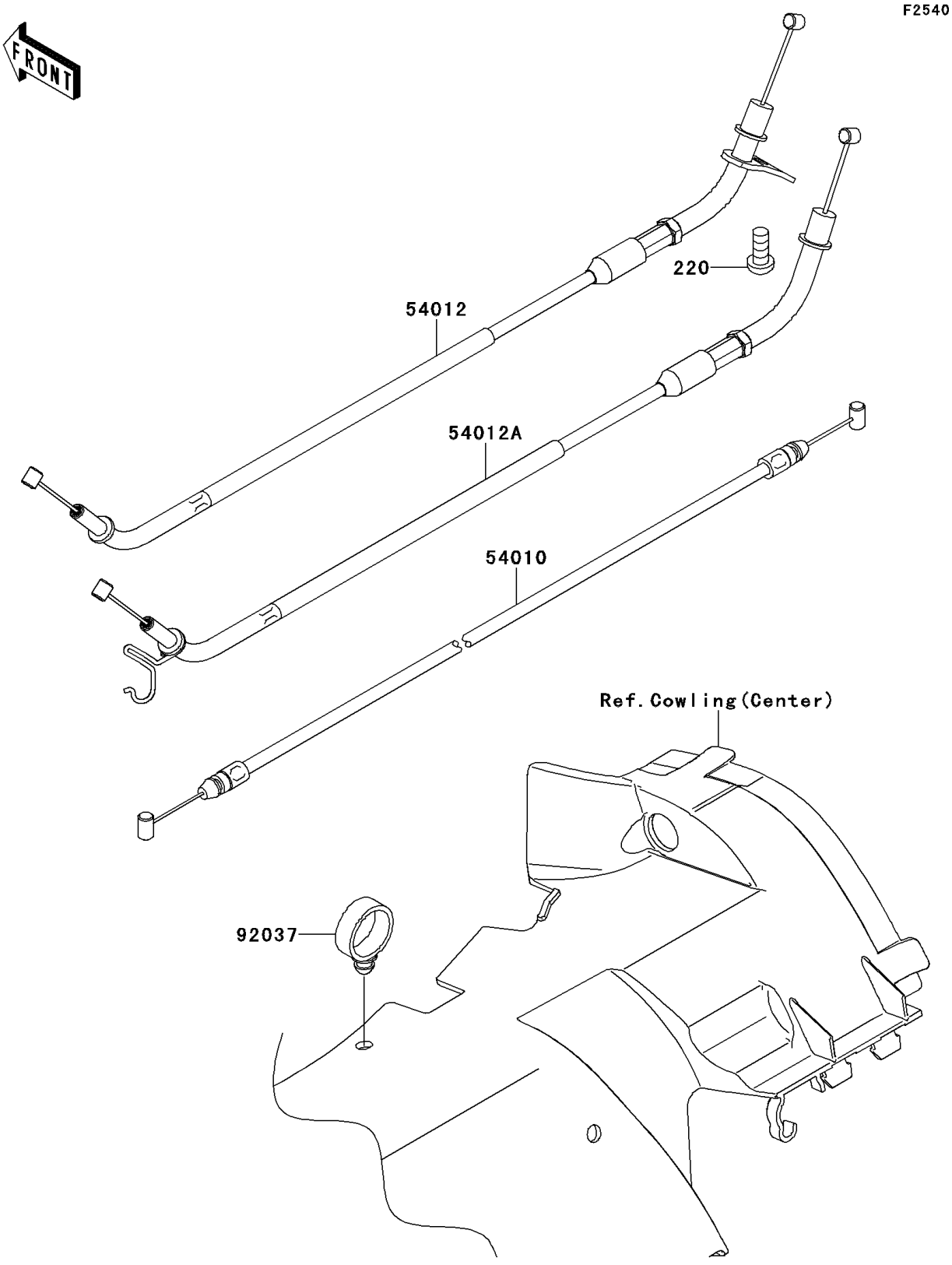


© 2024 Kawasaki Motors Corp., U.S.A.

# 2011 CONCOURS® 14 ABS PARTS LIST

Cables

| ITEM NAME | PART NUMBER | QUANTITY |
|---|---|---|
| SCREW-PAN-CROS,6X14 (Ref # 220) | 220AB0614 | 1 |
| CABLE,SEAT LOCK (Ref # 54010) | 54010-0066 | 1 |
| CABLE-THROTTLE,CLOSING (Ref # 54012) | 54012-0199 | 1 |
| CABLE-THROTTLE,OPENING (Ref # 54012A) | 54012-0223 | 1 |
| CLAMP,HOSE (Ref # 92037) | 92037-1827 | 1 |

© 2024 Kawasaki Motors Corp., U.S.A.