2014 KLX®110L PARTS DIAGRAM

Camshaft(s)/Tensioner

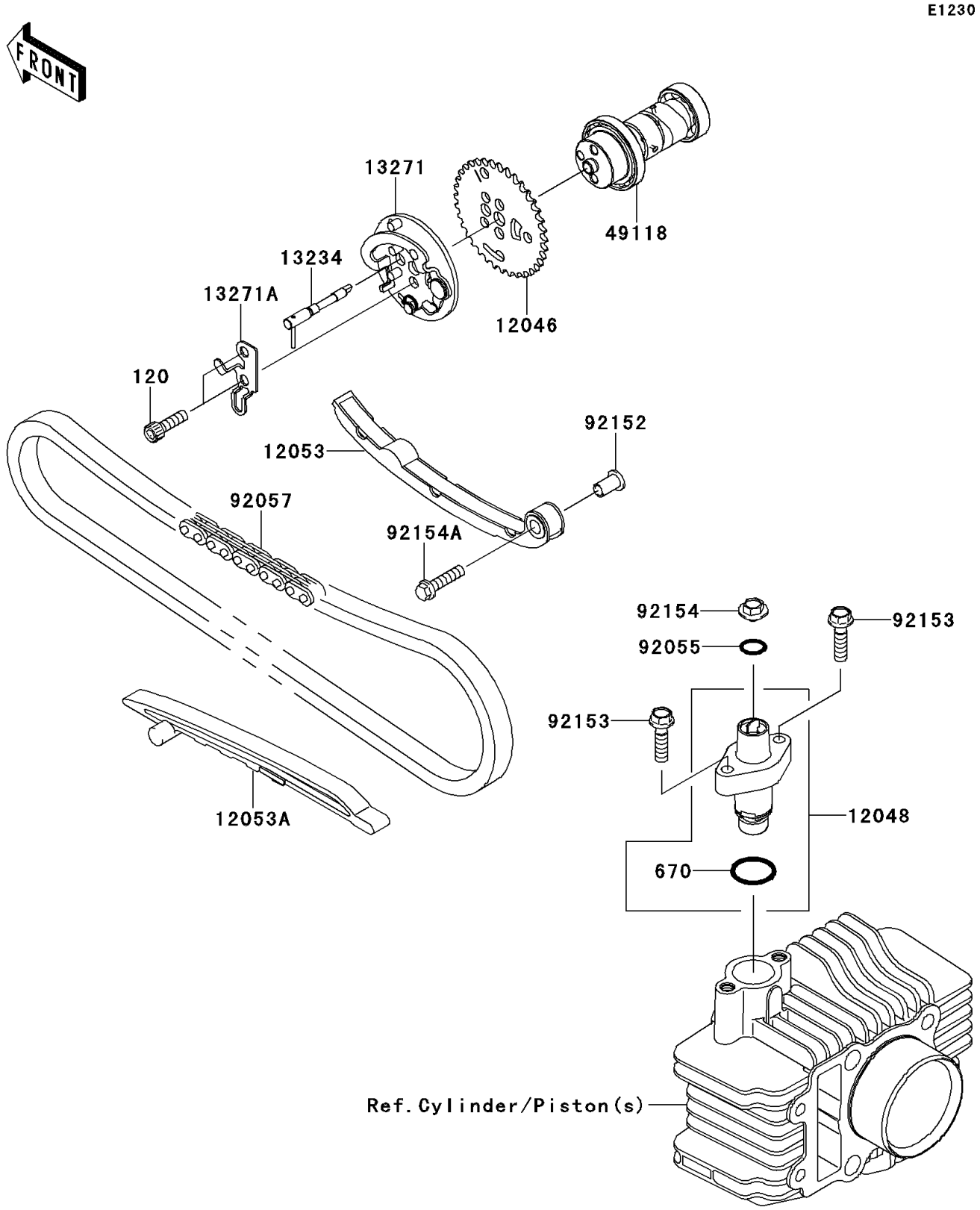

© 2026 Kawasaki Motors Corp., U.S.A.

2014 KLX®110L PARTS LIST

Camshaft(s)/Tensioner

ITEM NAME	PART NUMBER	QUANTITY
BOLT-SOCKET,6X20 (Ref # 120)	120CA0620	2
O RING,21MM (Ref # 670)	670D2021	1
SPROCKET (Ref # 12046)	12046-0059	1
TENSIONER-ASSY (Ref # 12048)	12048-1164	1
GUIDE-CHAIN,LOOSE (Ref # 12053)	12053-0006	1
GUIDE-CHAIN (Ref # 12053A)	12053-1461	1
SHAFT-COMP (Ref # 13234)	13234-0033	1
PLATE (Ref # 13271)	13271-0948	1
PLATE (Ref # 13271A)	13271-0950	1
CAMSHAFT-COMP (Ref # 49118)	49118-0131	1
RING-O,9.8X2.4 (Ref # 92055)	92055-0060	1
CHAIN,CAM,94L (Ref # 92057)	92057-0127	1
COLLAR,CHAIN GUIDE (Ref # 92152)	92152-1369	1
BOLT,6X25 (Ref # 92153)	92153-1185	2
BOLT,FLANGED,6X6 (Ref # 92154)	92154-0536	1
BOLT,FLANGED,6X25 (Ref # 92154A)	92154-1156	1

© 2026 Kawasaki Motors Corp., U.S.A.