# 2010 Ninja® 650R PARTS DIAGRAM

Swingarm

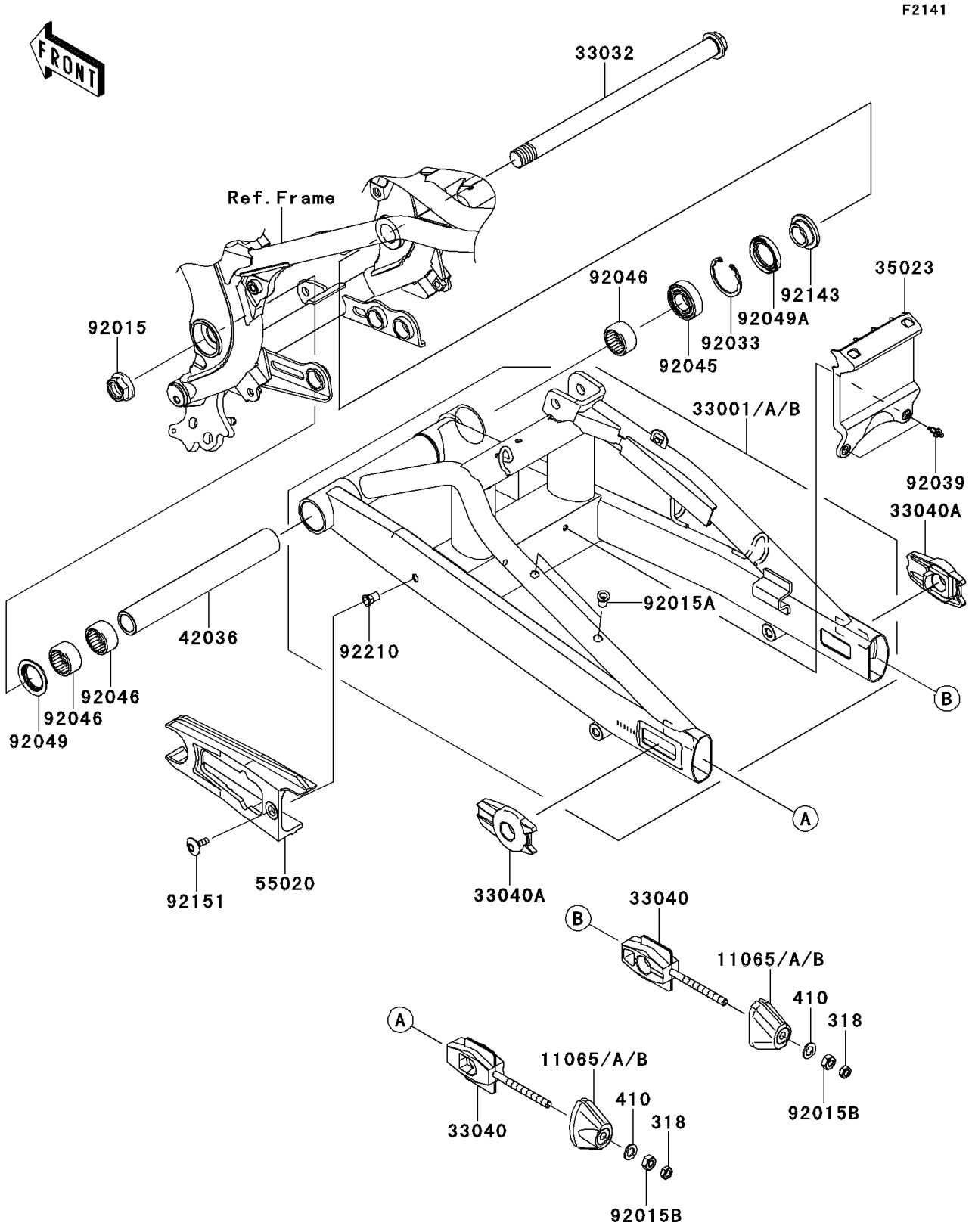


© 2024 Kawasaki Motors Corp., U.S.A.

# 2010 Ninja® 650R PARTS LIST

Swingarm

| ITEM NAME | PART NUMBER | QUANTITY |
|---|---|---|
| NUT-HEX-SMALL (Ref # 318) | 318AB0800 | 2 |
| WASHER-PLAIN-SMALL,8MM,BLACK (Ref # 410) | 410AB0800 | 2 |
| CAP,CHAIN ADJUSTER,BLACK (Ref # 11065) | 11065-0258-10 | 2 |
| CAP,CHAIN ADJUSTER,F.M.GRAY (Ref # 11065A) | 11065-0258-26M | 2 |
| ARM-COMP-SWING,BLACK (Ref # 33001) | 33001-0161-10 | 1 |
| ARM-COMP-SWING,F.M.GRAY (Ref # 33001A) | 33001-0161-26M | 1 |
| SHAFT-SWING ARM (Ref # 33032) | 33032-1142 | 1 |
| ADJUSTER-CHAIN,INNER (Ref # 33040) | 33040-0025 | 2 |
| ADJUSTER-CHAIN,OUTER,P.SILVER (Ref # 33040A) | 33040-0026-458 | 2 |
| FENDER-REAR,SWING ARM (Ref # 35023) | 35023-0149 | 1 |
| SLEEVE,SWING ARM,L=219.5 (Ref # 42036) | 42036-0066 | 1 |
| GUARD,CHAIN (Ref # 55020) | 55020-0192 | 1 |
| NUT,FLANGED,20MM (Ref # 92015) | 92015-1724 | 1 |
| NUT,POP,6MM (Ref # 92015A) | 92015-1759 | 2 |
| NUT,8MM (Ref # 92015B) | 92015-1959 | 2 |
| RING-SNAP,42MM (Ref # 92033) | 92033-1041 | 1 |
| RIVET (Ref # 92039) | 92039-0023 | 2 |
| BEARING-BALL,6004UL11 (Ref # 92045) | 92045-0017 | 1 |
| BEARING-NEEDLE,7E-HVS 28X34X17 (Ref # 92046) | 92046-0008 | 3 |
| SEAL-OIL (Ref # 92049) | 92049-0132 | 1 |
| SEAL-OIL (Ref # 92049A) | 92049-0138 | 1 |
| COLLAR,SWING ARM,RH,L=12.5 (Ref # 92143) | 92143-1727 | 1 |
| BOLT,SOCKET,6X18 (Ref # 92151) | 92151-1149 | 1 |
| NUT,POP,6MM,L=15 (Ref # 92210) | 92210-1397 | 1 |

© 2024 Kawasaki Motors Corp., U.S.A.