Mule 3010 4X4 PARTS DIAGRAM

Decals(KAF620-E3-E5)

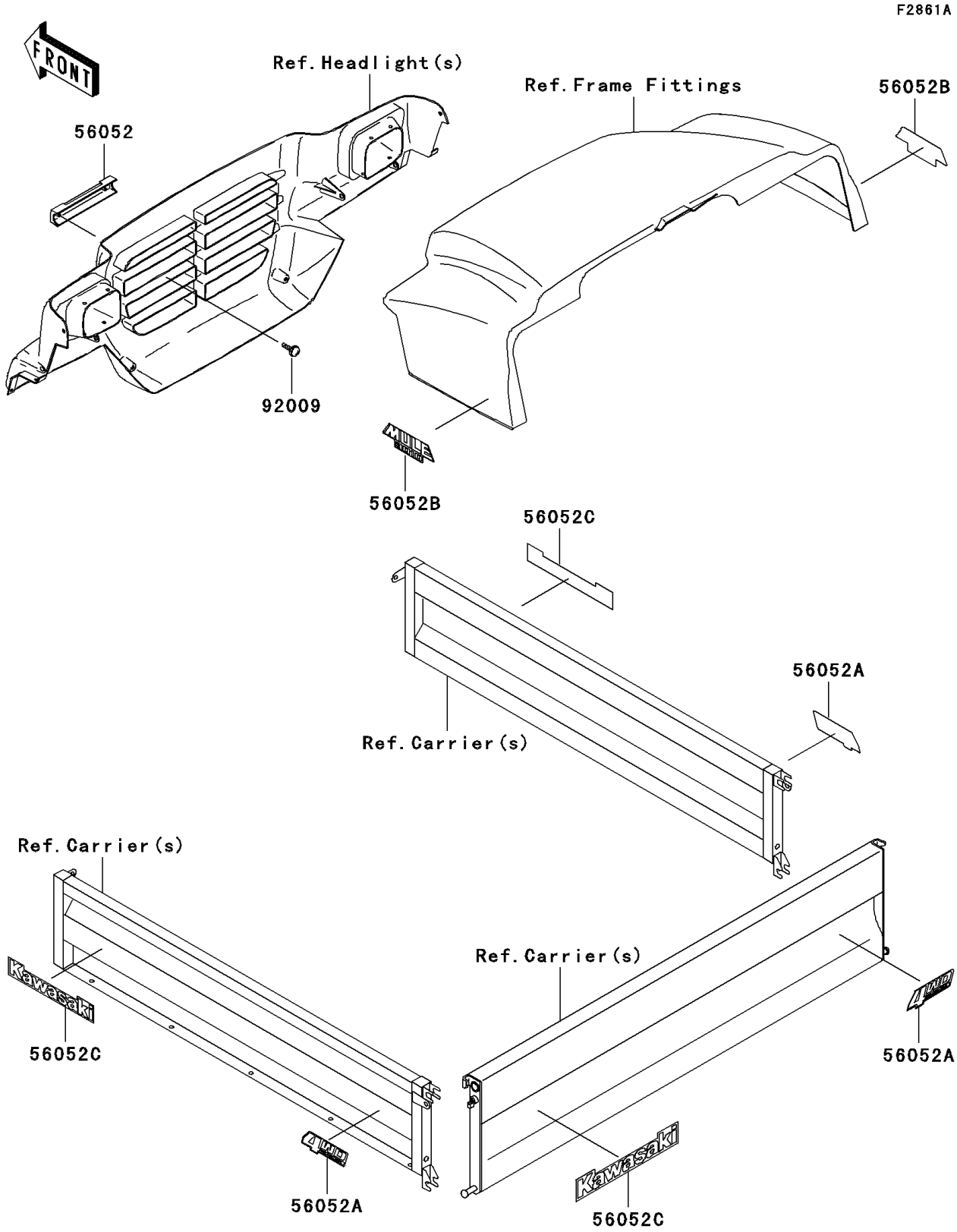

© 2024 Kawasaki Motors Corp., U.S.A.

Mule 3010 4X4 PARTS LIST

Decals(KAF620-E3-E5)

ITEM NAME	PART NUMBER	QUANTITY
MARK,FRONT GRIL,KAWASAKI (Ref # 56052)	56052-1245	1
MARK,SIDE PLATE,4WD (Ref # 56052A)	56052-1247	3
MARK,FR FENDER,MULE 3010 (Ref # 56052B)	56052-1268	2
MARK,KAWASAKI (Ref # 56052C)	56052-1809	3
SCREW,TAPPING,4X12 (Ref # 92009)	92009-1444	2

© 2024 Kawasaki Motors Corp., U.S.A.