Mule 3010 4X4 PARTS DIAGRAM

Starter Motor

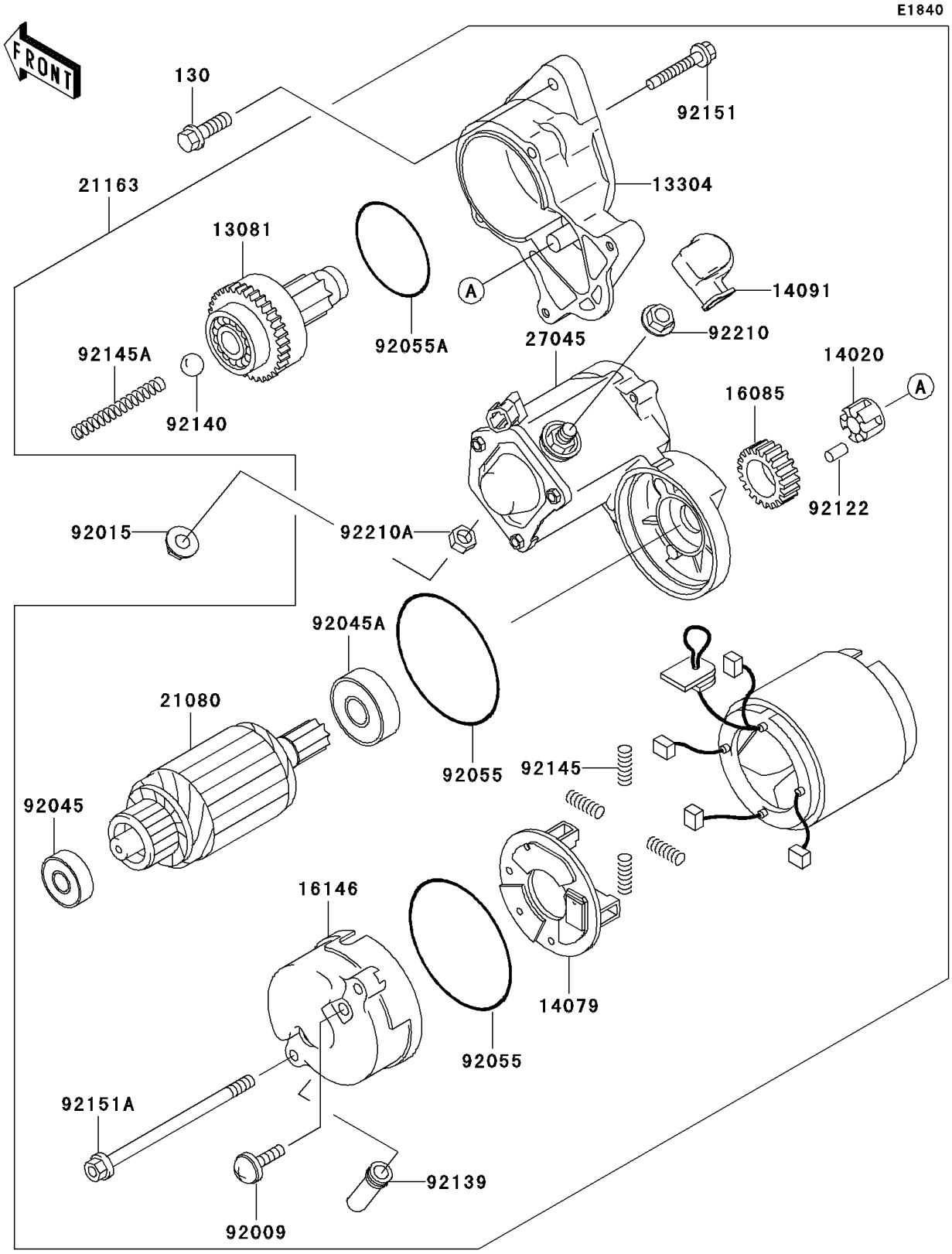

© 2024 Kawasaki Motors Corp., U.S.A.

Mule 3010 4X4 PARTS LIST

Starter Motor

ITEM NAME	PART NUMBER	QUANTITY
BOLT-FLANGED,8X30 (Ref # 130)	130P0830	2
CLUTCH-ASSY (Ref # 13081)	13081-2231	1
HOUSING-ASSY (Ref # 13304)	13304-2201	1
RETAINER (Ref # 14020)	14020-2112	1
HOLDER-ASSY (Ref # 14079)	14079-2064	1
COVER (Ref # 14091)	14091-2080	1
GEAR (Ref # 16085)	16085-2055	1
COVER-ASSY (Ref # 16146)	16146-2228	1
ARMATURE (Ref # 21080)	21080-2070	1
STARTER-ELECTRIC (Ref # 21163)	21163-2124	1
SWITCH-ASSY (Ref # 27045)	27045-2018	1
SCREW (Ref # 92009)	92009-2455	2
NUT,8MM (Ref # 92015)	92015-1143	1
BEARING-BALL (Ref # 92045)	92045-2257	1
BEARING-BALL (Ref # 92045A)	92045-2258	1
RING-O (Ref # 92055)	92055-2199	2
RING-O (Ref # 92055A)	92055-2200	1
ROLLER (Ref # 92122)	92122-2057	5
BUSHING (Ref # 92139)	92139-2051	1
BALL (Ref # 92140)	92140-2061	1
SPRING (Ref # 92145)	92145-2096	4
SPRING (Ref # 92145A)	92145-2097	1
BOLT (Ref # 92151)	92151-2167	2
BOLT (Ref # 92151A)	92151-2168	2
NUT (Ref # 92210)	92210-2084	1
NUT (Ref # 92210A)	92210-2085	1

© 2024 Kawasaki Motors Corp., U.S.A.