# Mule 3010 4X4 PARTS DIAGRAM

## Cylinder Head

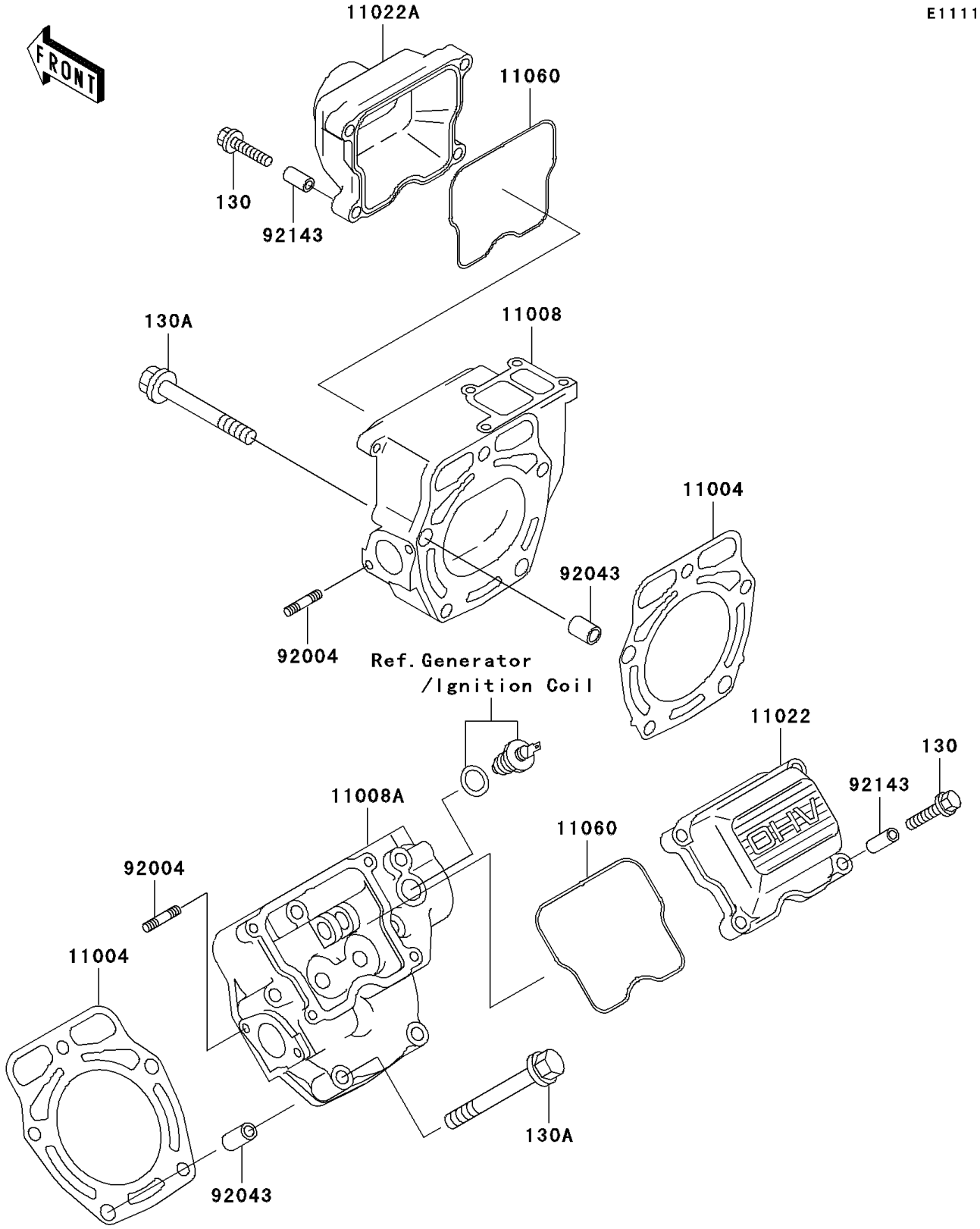


© 2024 Kawasaki Motors Corp., U.S.A.

# Mule 3010 4X4 PARTS LIST

## Cylinder Head

| ITEM NAME | PART NUMBER | QUANTITY |
|---|---|---|
| BOLT-FLANGED,6X25 (Ref # 130) | 130B0625 | 8 |
| BOLT-FLANGED,8X65 (Ref # 130A) | 130G0865 | 10 |
| GASKET-HEAD (Ref # 11004) | 11004-2107 | 2 |
| HEAD-COMP-CYLINDER (Ref # 11008) | 11008-2139 | 1 |
| HEAD-COMP-CYLINDER (Ref # 11008A) | 11008-6033 | 1 |
| CASE-ROCKER (Ref # 11022) | 11022-2056 | 1 |
| CASE-ROCKER (Ref # 11022A) | 11022-2068 | 1 |
| GASKET,ROCKER CASE (Ref # 11060) | 11060-2332 | 2 |
| STUD (Ref # 92004) | 92004-2142 | 4 |
| PIN,DOWEL,10X14 (Ref # 92043) | 92043-1037 | 4 |
| COLLAR (Ref # 92143) | 92143-2010 | 8 |

© 2024 Kawasaki Motors Corp., U.S.A.