2010 Teryx® 750 FI 4x4 LE PARTS DIAGRAM

Front Fender(s)

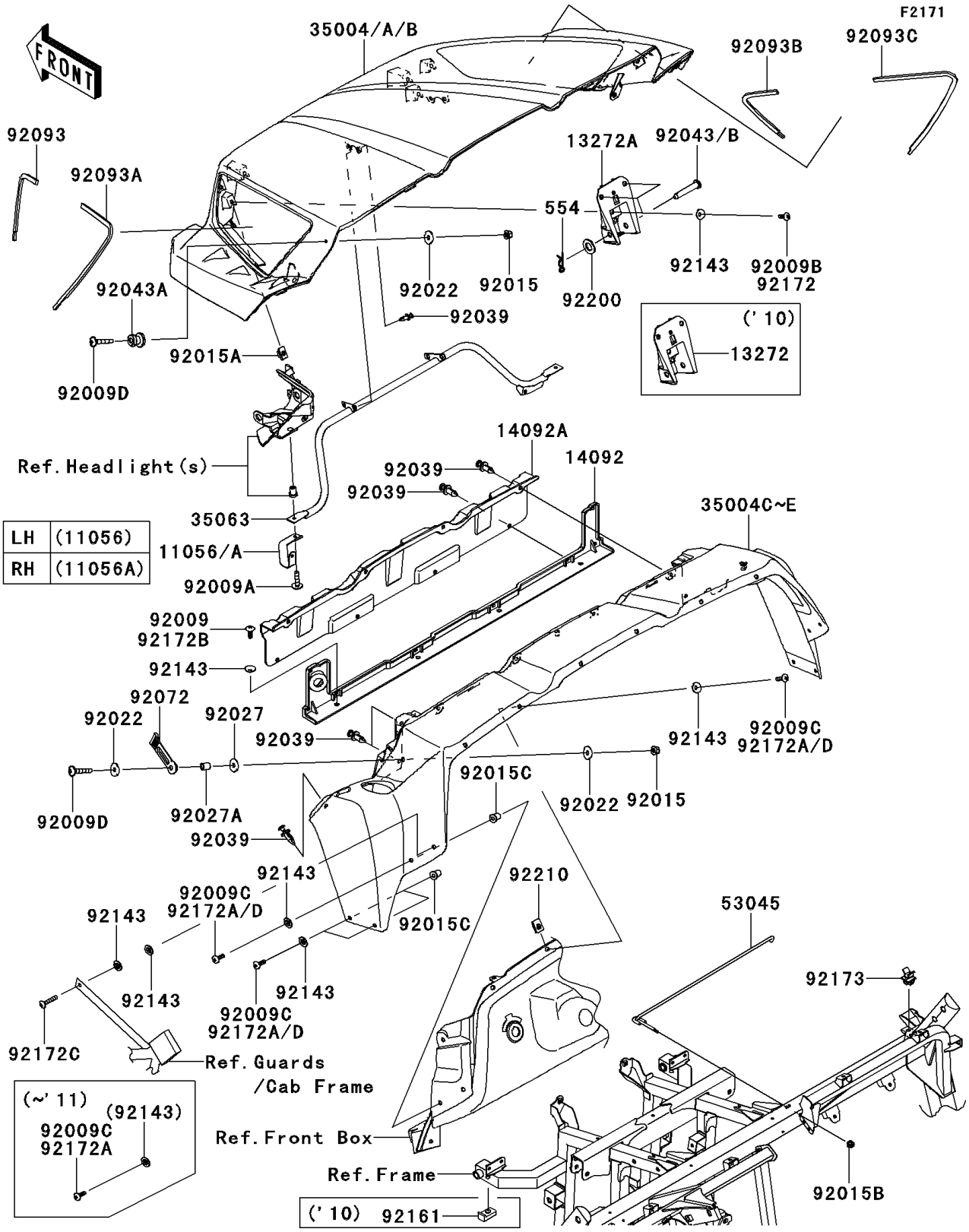

© 2024 Kawasaki Motors Corp., U.S.A.

2010 Teryx® 750 FI 4x4 LE PARTS LIST

Front Fender(s)

ITEM NAME	PART NUMBER	QUANTITY
BRACKET,LH (Ref # 11056)	11056-0129	1
BRACKET,RH (Ref # 11056A)	11056-0130	1
PLATE (Ref # 13272)	13272-0849	2
COVER,BASE PLATE (Ref # 14092)	14092-0059	1
COVER,CHECK PLATE (Ref # 14092A)	14092-0060	1
FENDER-FRONT,FR,M.R.RED (Ref # 35004A)	35004-0134-31B	1
FENDER-FRONT,RR,M.R.RED (Ref # 35004D)	35004-0143-31B	1
STAY,HEAD LAMP (Ref # 35063)	35063-0677	1
HOOK-ASSY (Ref # 53045)	53045-0018	1
SCREW,TAPPING,6X16 (Ref # 92009)	92009-1166	4
SCREW,6X25 (Ref # 92009A)	92009-1465	2
SCREW,5X16,BLACK (Ref # 92009B)	92009-1654	6
SCREW,5X20,BLACK (Ref # 92009C)	92009-1656	14
SCREW,6X35 (Ref # 92009D)	92009-1672	4
NUT,LOCK,FLANGED,6MM (Ref # 92015)	92015-1339	4
NUT,5MM (Ref # 92015A)	92015-1627	6
NUT,LOCK,FLANGED,5MM (Ref # 92015B)	92015-1752	1
NUT,WELL,5MM (Ref # 92015C)	92015-1757	8
WASHER,6.5X20X1.6,WHITE (Ref # 92022)	92022-193	6
COLLAR,L=5.1 (Ref # 92027)	92027-1260	2
COLLAR,6.8X10X12 (Ref # 92027A)	92027-162	2
RIVET (Ref # 92039)	92039-1229	18
PIN,12.4X72.4 (Ref # 92043)	92043-0168	2
PIN (Ref # 92043A)	92043-0197	2
BAND (Ref # 92072)	92072-0144	2
SEAL,FR,LH (Ref # 92093)	92093-0168	1
SEAL,RR,LH (Ref # 92093A)	92093-0169	1
SEAL,FR,RH (Ref # 92093B)	92093-0170	1
SEAL,RR,RH (Ref # 92093C)	92093-0171	1

© 2024 Kawasaki Motors Corp., U.S.A.

2010 Teryx® 750 FI 4x4 LE PARTS LIST

Front Fender(s)

ITEM NAME	PART NUMBER	QUANTITY
COLLAR (Ref # 92143)	92143-1087	24
DAMPER (Ref # 92161)	92161-0861	2
PIN-SNAP,12MM (Ref # 554)	554DA1200	2
CLAMP (Ref # 92173)	92173-0106	1
WASHER,13X24X2 (Ref # 92200)	92200-0451	2
NUT,5MM (Ref # 92210)	92210-0499	6

© 2024 Kawasaki Motors Corp., U.S.A.