# 2008 Mule 3010 Trans4x4 Diesel PARTS DIAGRAM

## Front Suspension

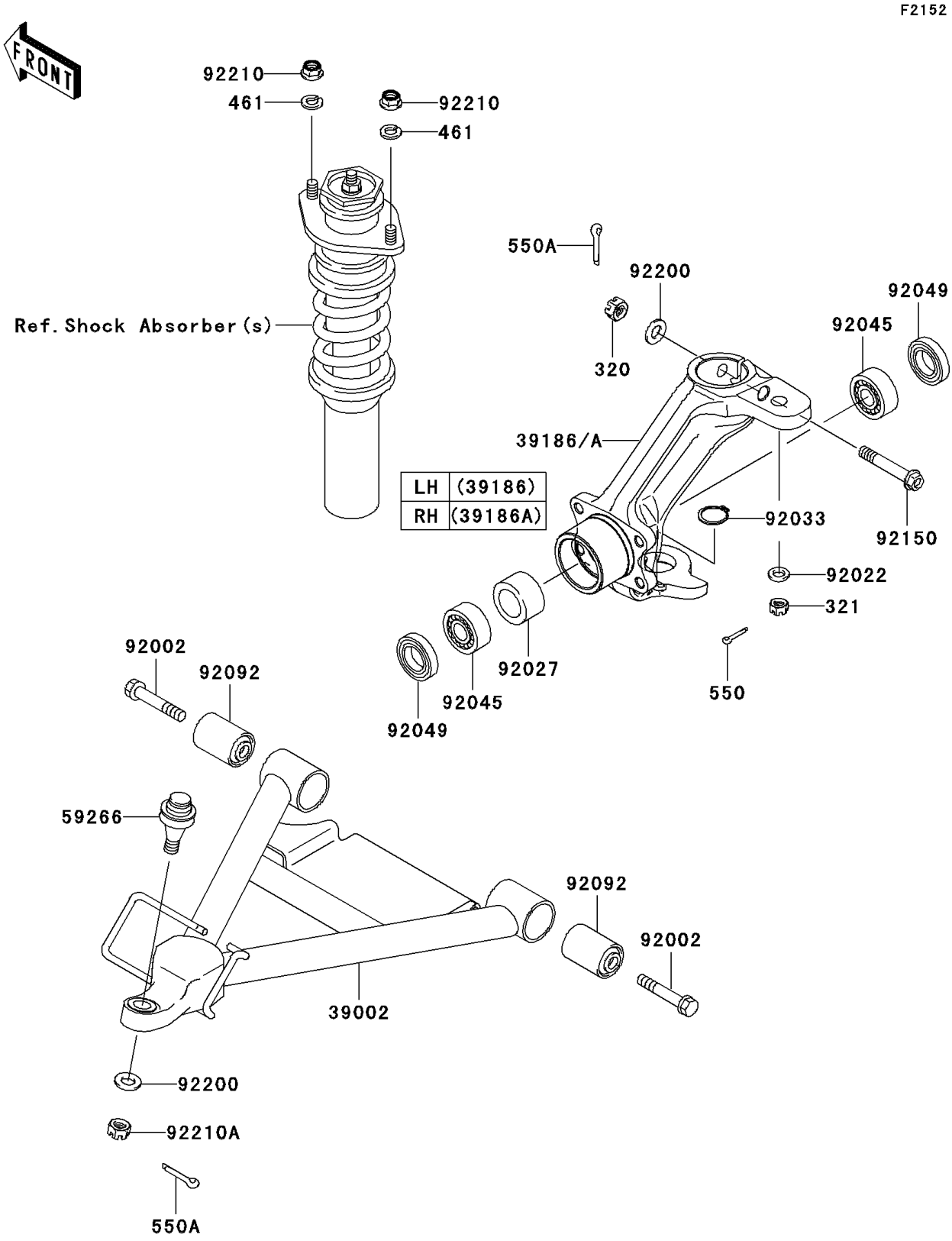


© 2024 Kawasaki Motors Corp., U.S.A.

# 2008 Mule 3010 Trans4x4 Diesel PARTS LIST

## Front Suspension

| ITEM NAME | PART NUMBER | QUANTITY |
|---|---|---|
| NUT-CASTLE (Ref # 320) | 320G1200 | 2 |
| NUT-CASTLE (Ref # 321) | 321H1000 | 2 |
| WASHER-SPRING (Ref # 461) | 461L1000 | 4 |
| PIN-COTTER,2.0X22 (Ref # 550) | 550D2022 | 2 |
| PIN-COTTER,3.0X25 (Ref # 550A) | 550D3025 | 4 |
| ARM-COMP-SUSP (Ref # 39002) | 39002-0001 | 2 |
| KNUCKLE,FR,LH (Ref # 39186) | 39186-0057 | 1 |
| KNUCKLE,FR,RH (Ref # 39186A) | 39186-0058 | 1 |
| JOINT-BALL (Ref # 59266) | 59266-1080 | 2 |
| BOLT,FLANGED,12X75 (Ref # 92002) | 92002-1661 | 4 |
| WASHER,10.5X18X2.5 (Ref # 92022) | 92022-1876 | 2 |
| COLLAR,L=34.5 (Ref # 92027) | 92027-1538 | 2 |
| RING-SNAP,C-TYPE,32MM (Ref # 92033) | 92033-1262 | 2 |
| BEARING-BALL,60052RD (Ref # 92045) | 92045-0105 | 4 |
| SEAL-OIL,SD35X47X7HS (Ref # 92049) | 92049-1513 | 4 |
| BUSHING-RUBBER (Ref # 92092) | 92092-1065 | 4 |
| BOLT,FLANGED,12X72 (Ref # 92150) | 92150-1356 | 2 |
| WASHER,12.3X23X2.3 (Ref # 92200) | 92200-1004 | 4 |
| NUT,LOCK,FLANGED,10MM (Ref # 92210) | 92210-0276 | 4 |
| NUT,CASTLE,12MM (Ref # 92210A) | 92210-0395 | 2 |

© 2024 Kawasaki Motors Corp., U.S.A.