Mule 3010 Trans4x4 Diesel PARTS DIAGRAM

Rear Hubs/Brakes

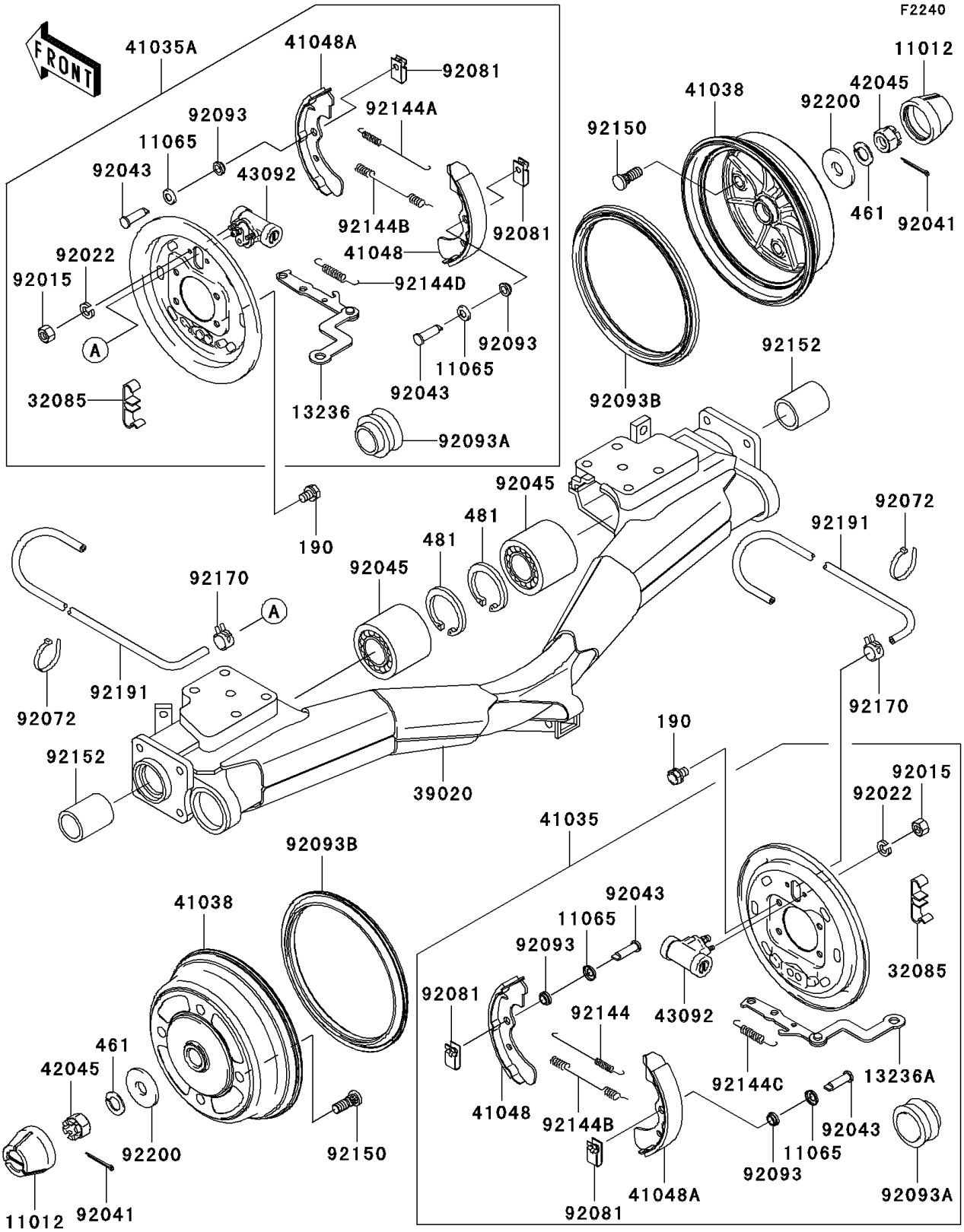

© 2024 Kawasaki Motors Corp., U.S.A.

Mule 3010 Trans4x4 Diesel PARTS LIST

Rear Hubs/Brakes

ITEM NAME	PART NUMBER	QUANTITY

© 2024 Kawasaki Motors Corp., U.S.A.