Mule 3010 Trans4x4 Hardwoods Green HD PARTS DIAGRAM

Drive Shaft-Front

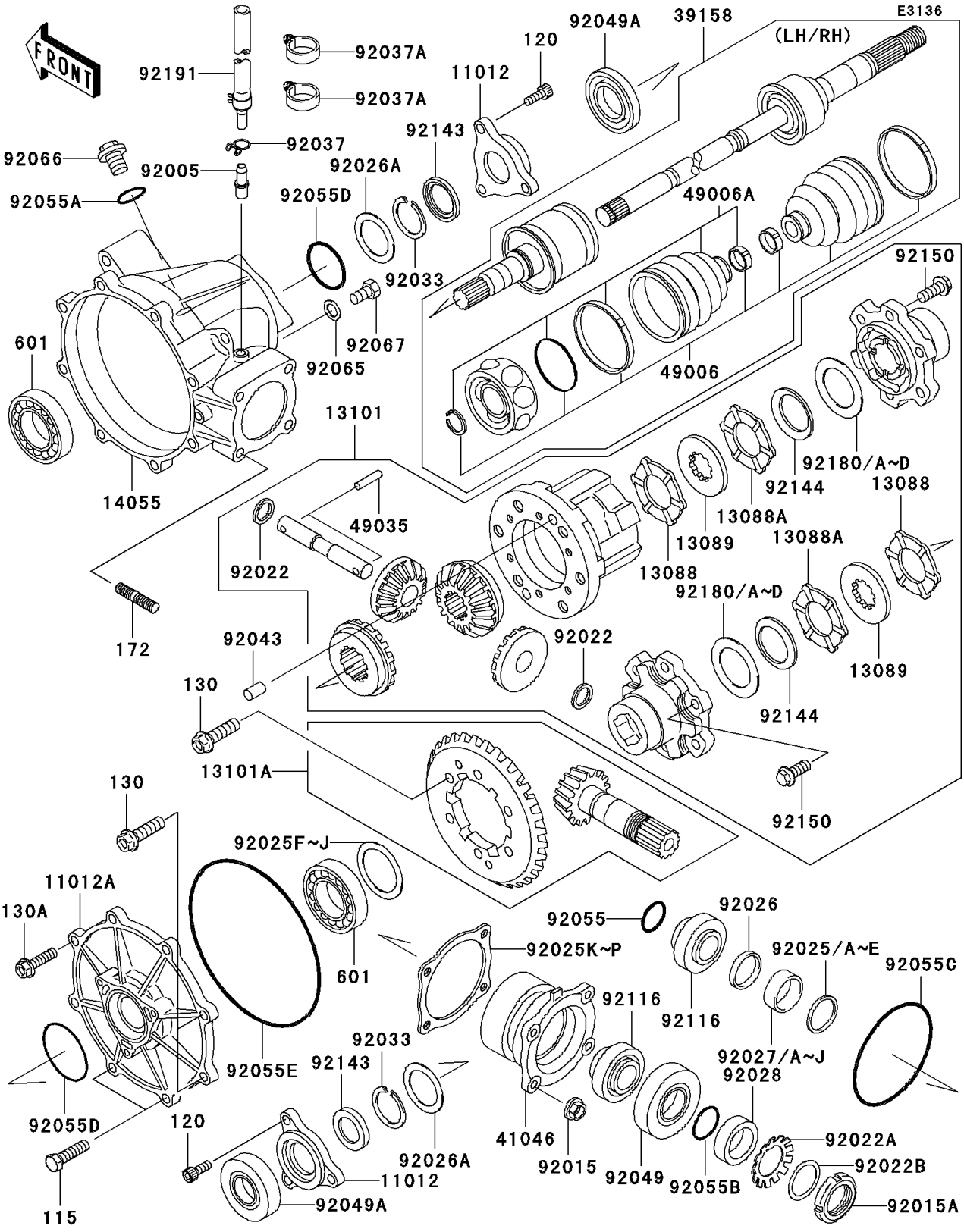

© 2024 Kawasaki Motors Corp., U.S.A.

Mule 3010 Trans4x4 Hardwoods Green HD PARTS LIST

Drive Shaft-Front

ITEM NAME	PART NUMBER	QUANTITY
CAP (Ref # 11012)	11012-1648	2
CAP,GEAR CASE (Ref # 11012A)	11012-1649	1
PLATE-FRICTION,T=2.8 (Ref # 13088)	13088-1075	2
PLATE-FRICTION,T=2.4 (Ref # 13088A)	13088-1078	2
PLATE-CLUTCH (Ref # 13089)	13089-1083	2
GEAR-ASSY (Ref # 13101)	13101-1190	1
GEAR-ASSY,BEVEL (Ref # 13101A)	13101-5081	1
CASE-GEAR,FR (Ref # 14055)	14055-1114	1
SHAFT-ASSY-DRIVE,FR (Ref # 39158)	39158-1102	2
HOUSING-BEARING (Ref # 41046)	41046-1089	1
BOOT,BJ (Ref # 49006)	49006-0054	2
BOOT,DOJ (Ref # 49006A)	49006-0055	2
PIN-SPRING (Ref # 49035)	49035-1056	2
FITTING,BREATHER (Ref # 92005)	92005-1127	1
NUT,8MM (Ref # 92015)	92015-1402	4
NUT,25MM (Ref # 92015A)	92015-1768	1
WASHER (Ref # 92022)	92022-1941	2
WASHER,TOOTHED (Ref # 92022A)	92022-1990	1
WASHER,25.3X32X0.5 (Ref # 92022B)	92022-225	1
SHIM,25.2X29.8X1.70 (Ref # 92025)	92025-1072	AR
SHIM,25.2X29.8X1.72 (Ref # 92025A)	92025-1073	AR
SHIM,25.2X29.8X1.74 (Ref # 92025B)	92025-1074	AR
SHIM,25.2X29.8X1.76 (Ref # 92025C)	92025-1075	AR
SHIM,25.2X29.8X1.78 (Ref # 92025D)	92025-1076	AR
SHIM,25.2X29.8X1.80 (Ref # 92025E)	92025-1077	AR
SHIM,35.3X46X1.00 (Ref # 92025F)	92025-1849	AR
SHIM,35.3X46X0.10 (Ref # 92025G)	92025-1850	AR
SHIM,35.3X46X0.15 (Ref # 92025H)	92025-1851	AR
SHIM,35.3X46X0.50 (Ref # 92025I)	92025-1856	AR

© 2024 Kawasaki Motors Corp., U.S.A.

Mule 3010 Trans4x4 Hardwoods Green HD PARTS LIST

Drive Shaft-Front

ITEM NAME	PART NUMBER	QUANTITY
SHIM,35.3X46X0.80 (Ref # 92025J)	92025-1857	AR
SHIM,T=0.10 (Ref # 92025K)	92025-1919	AR
SHIM,T=0.15 (Ref # 92025L)	92025-1920	AR
SHIM,T=0.50 (Ref # 92025M)	92025-1921	AR
SHIM,T=0.80 (Ref # 92025N)	92025-1922	AR
SHIM,T=1.00 (Ref # 92025O)	92025-1923	AR
SHIM,T=1.20 (Ref # 92025P)	92025-1924	AR
SPACER (Ref # 92026)	92026-1337	1
SPACER,29X40X1.0 (Ref # 92026A)	92026-1338	2
COLLAR,25.2X29.8X10.2 (Ref # 92027)	92027-1401	AR
COLLAR,25.2X29.8X10.3 (Ref # 92027A)	92027-1402	AR
BOLT-SMALL-UPSET,8X30 (Ref # 115)	115P0830	2
BOLT-SOCKET,6X16 (Ref # 120)	120CA0616	6
BOLT-FLANGED,10X35 (Ref # 130)	130CA1035	8
BOLT-FLANGED,8X30 (Ref # 130A)	130P0830	4
BOLT-STUD,8X22 (Ref # 172)	172BA0822	4
COLLAR,25.2X29.8X10.4 (Ref # 92027B)	92027-1403	AR
COLLAR,25.2X29.8X10.5 (Ref # 92027C)	92027-1404	AR
COLLAR,25.2X29.8X10.6 (Ref # 92027D)	92027-1405	AR
COLLAR,25.2X29.8X10.7 (Ref # 92027E)	92027-1406	AR
COLLAR,25.2X29.8X10.8 (Ref # 92027F)	92027-1407	AR
COLLAR,25.2X29.8X10.9 (Ref # 92027G)	92027-1408	AR
COLLAR,25.2X29.8X11.0 (Ref # 92027H)	92027-1409	AR
COLLAR,25.2X29.8X11.1 (Ref # 92027I)	92027-1410	AR
COLLAR,25.2X29.8X11.2 (Ref # 92027J)	92027-1411	AR
BUSHING (Ref # 92028)	92028-1699	1
RING-SNAP,T=1.5 (Ref # 92033)	92033-1249	2
CLAMP,TUBE (Ref # 92037)	92037-147	1
CLAMP,HOSE (Ref # 92037A)	92037-1827	2

© 2024 Kawasaki Motors Corp., U.S.A.

Mule 3010 Trans4x4 Hardwoods Green HD PARTS LIST

Drive Shaft-Front

ITEM NAME	PART NUMBER	QUANTITY
PIN,8X18 (Ref # 92043)	92043-1400	2
SEAL-OIL,TC35X55X8 (Ref # 92049)	92049-1298	1
SEAL-OIL,TC30487 (Ref # 92049A)	92049-1309	2
RING-O,19.5X1.5 (Ref # 92055)	92055-055	1
RING-O,25.7X2.4 (Ref # 92055A)	92055-1136	1
RING-O,24.7MM (Ref # 92055B)	92055-1160	1
RING-O,65.2X2.4 (Ref # 92055C)	92055-1408	1
RING-O,46X2.5 (Ref # 92055D)	92055-1409	2
RING-O,154.1X2.5 (Ref # 92055E)	92055-1410	1
GASKET,10.5X16X1 (Ref # 92065)	92065-058	1
PLUG (Ref # 92066)	92066-1303	1
PLUG,DRAIN,10X12 (Ref # 92067)	92067-001	1
BEARING-ROLLER,4T30205 (Ref # 92116)	92116-1003	2
COLLAR (Ref # 92143)	92143-1703	2
SPRING (Ref # 92144)	92144-1671	2
BOLT,8X20 (Ref # 92150)	92150-1109	12
SHIM,32X48X0.8 (Ref # 92180)	92180-1121	AR
SHIM,32X48X1.0 (Ref # 92180A)	92180-1122	AR
SHIM,32X48X1.2 (Ref # 92180B)	92180-1123	AR
SHIM,32X48X1.4 (Ref # 92180C)	92180-1124	AR
SHIM,32X48X1.6 (Ref # 92180D)	92180-1125	AR
TUBE (Ref # 92191)	92191-1628	1
BEARING-BALL,#6007C3 (Ref # 601)	601B6007	2

© 2024 Kawasaki Motors Corp., U.S.A.