Mule 610 4x4 PARTS DIAGRAM

Headlight(s)

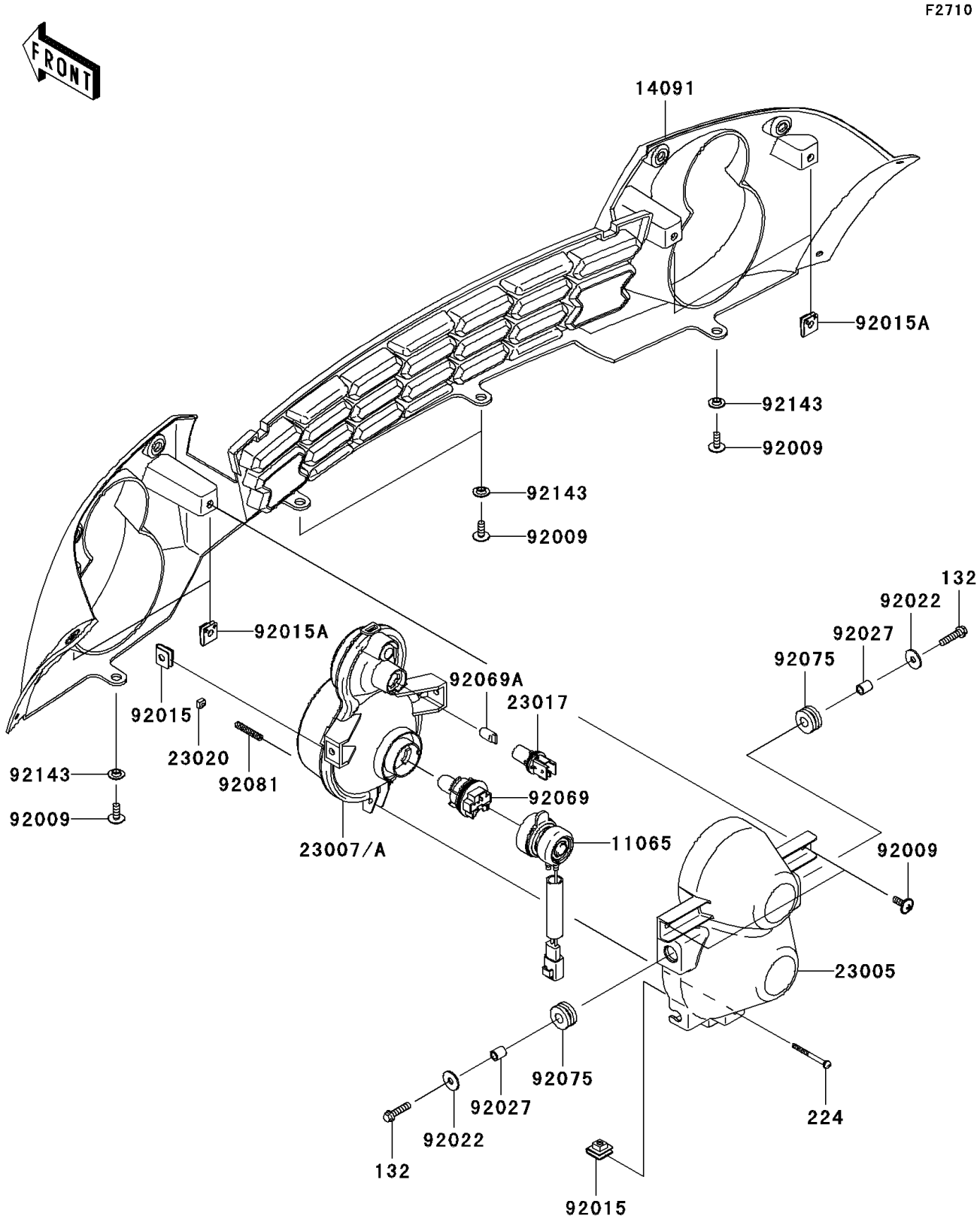

© 2024 Kawasaki Motors Corp., U.S.A.

Mule 610 4x4 PARTS LIST

Headlight(s)

ITEM NAME	PART NUMBER	QUANTITY

© 2024 Kawasaki Motors Corp., U.S.A.