2008 Mule 3010 4x4 Hardwoods Green HD PARTS DIAGRAM

Steering Wheel

F2311

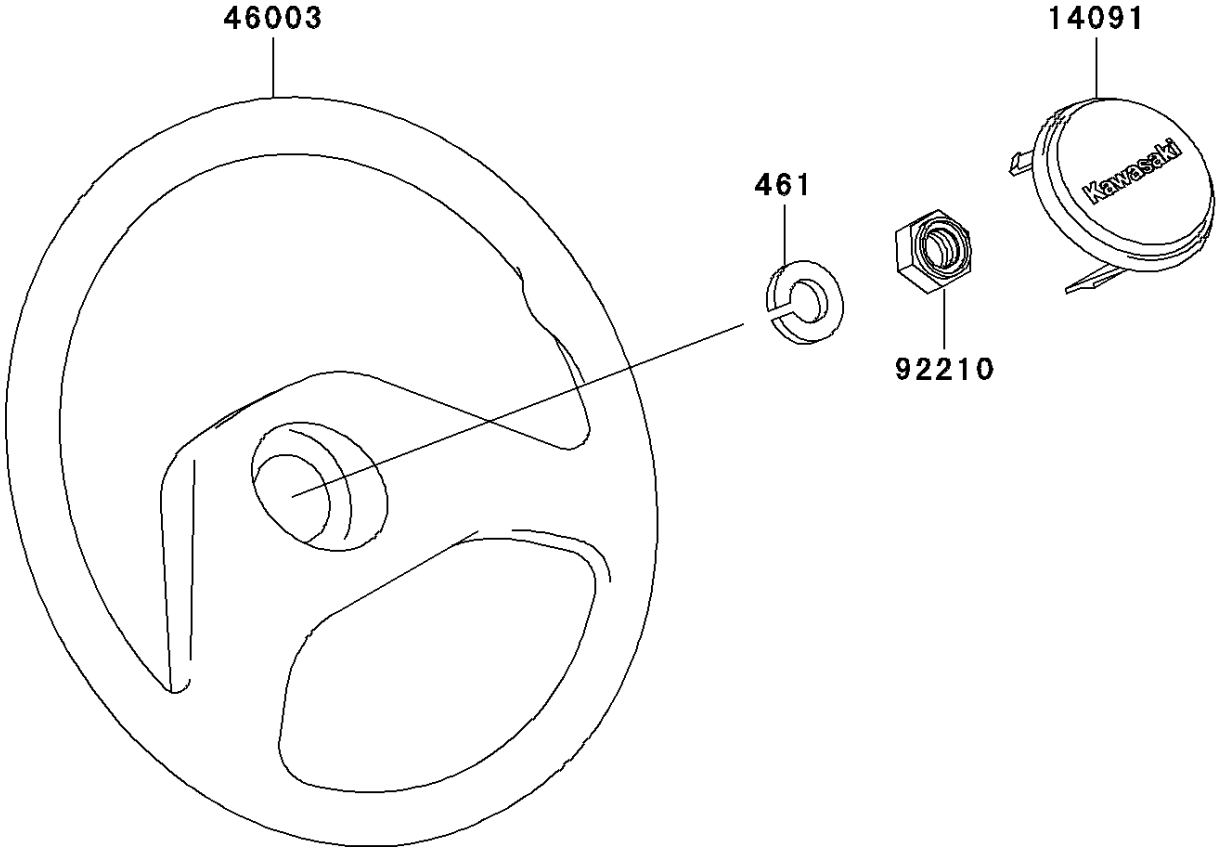

© 2025 Kawasaki Motors Corp., U.S.A.

2008 Mule 3010 4x4 Hardwoods Green HD PARTS LIST

Steering Wheel

ITEM NAME	PART NUMBER	QUANTITY
WASHER-SPRING,12MM (Ref # 461)	461F1200	1
COVER,HORN SWITCH (Ref # 14091)	14091-1247	1
HANDLE (Ref # 46003)	46003-1308	1
NUT,LOCK,12MM (Ref # 92210)	92210-1249	1

© 2025 Kawasaki Motors Corp., U.S.A.