2008 Mule 3010 4x4 Hardwoods Green HD PARTS DIAGRAM

Brake Pedal/Throttle Lever

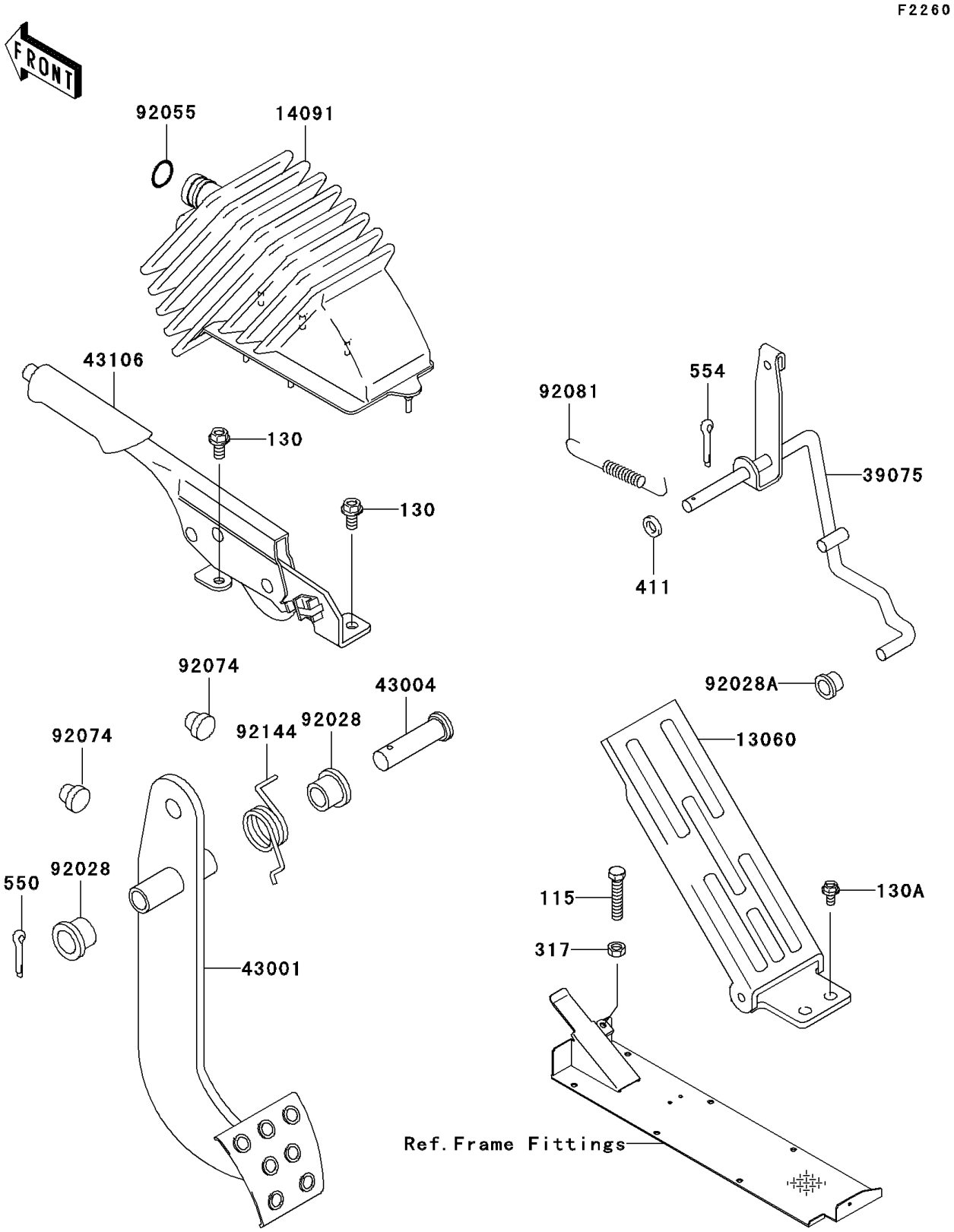

© 2025 Kawasaki Motors Corp., U.S.A.

2008 Mule 3010 4x4 Hardwoods Green HD PARTS LIST

Brake Pedal/Throttle Lever

ITEM NAME	PART NUMBER	QUANTITY
BOLT-SMALL-UPSET,8X40 (Ref # 115)	115AA0840	1
BOLT-FLANGED,8X16 (Ref # 130)	130AA0816	2
BOLT-FLANGED,6X12 (Ref # 130A)	130AB0612	2
NUT-HEX-SMALL,8MM (Ref # 317)	317H0800	1
WASHER-PLAIN,10MM (Ref # 411)	411E1000	1
PIN-COTTER,2.5X25 (Ref # 550)	550D2525	1
PIN-SNAP,10MM (Ref # 554)	554A1000	1
PEDAL,THROTTLE (Ref # 13060)	13060-1061	1
COVER,PARKING LEVER (Ref # 14091)	14091-0067	1
LEVER-THROTTLE (Ref # 39075)	39075-1057	1
LEVER-BRAKE,PEDAL (Ref # 43001)	43001-1320	1
SHAFT-BRAKE (Ref # 43004)	43004-1128	1
LEVER-ASSY-PARKING BRAKE (Ref # 43106)	43106-1005	1
BUSHING (Ref # 92028)	92028-1571	2
BUSHING,THROTTLE LEVER (Ref # 92028A)	92028-1601	1
RING-O,18X24X3 (Ref # 92055)	92055-1633	1
PLUG,7X2 (Ref # 92074)	92074-028	2
SPRING (Ref # 92081)	92081-1922	1
SPRING (Ref # 92144)	92144-1536	1

© 2025 Kawasaki Motors Corp., U.S.A.