Mule 3010 4x4 Hardwoods Green HD PARTS DIAGRAM

Drive Shaft-Propeller

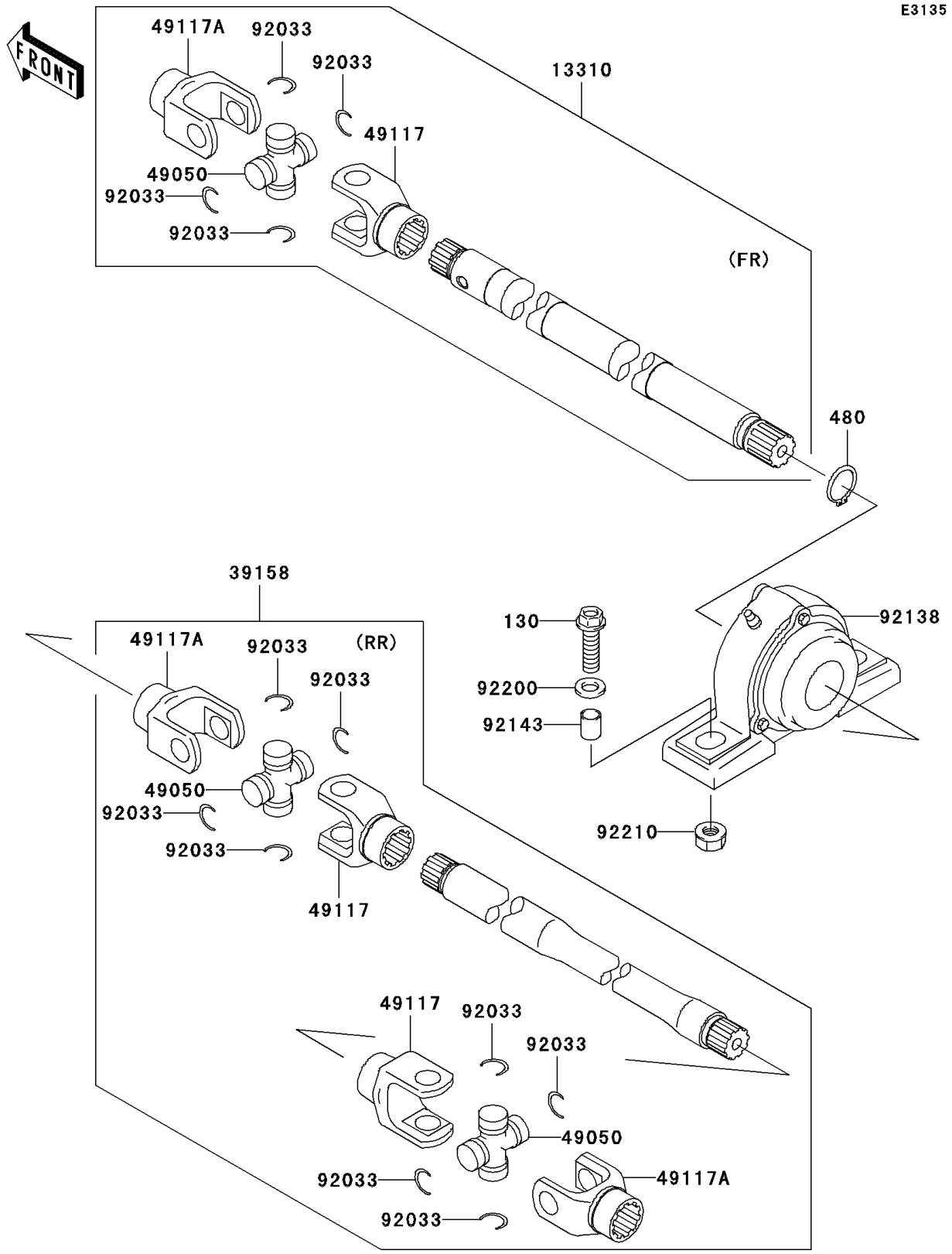

© 2026 Kawasaki Motors Corp., U.S.A.

Mule 3010 4x4 Hardwoods Green HD PARTS LIST

Drive Shaft-Propeller

ITEM NAME	PART NUMBER	QUANTITY

© 2026 Kawasaki Motors Corp., U.S.A.