2011 TERYX® 750 FI 4x4 LE PARTS DIAGRAM

Front Hubs/Brakes

F2230

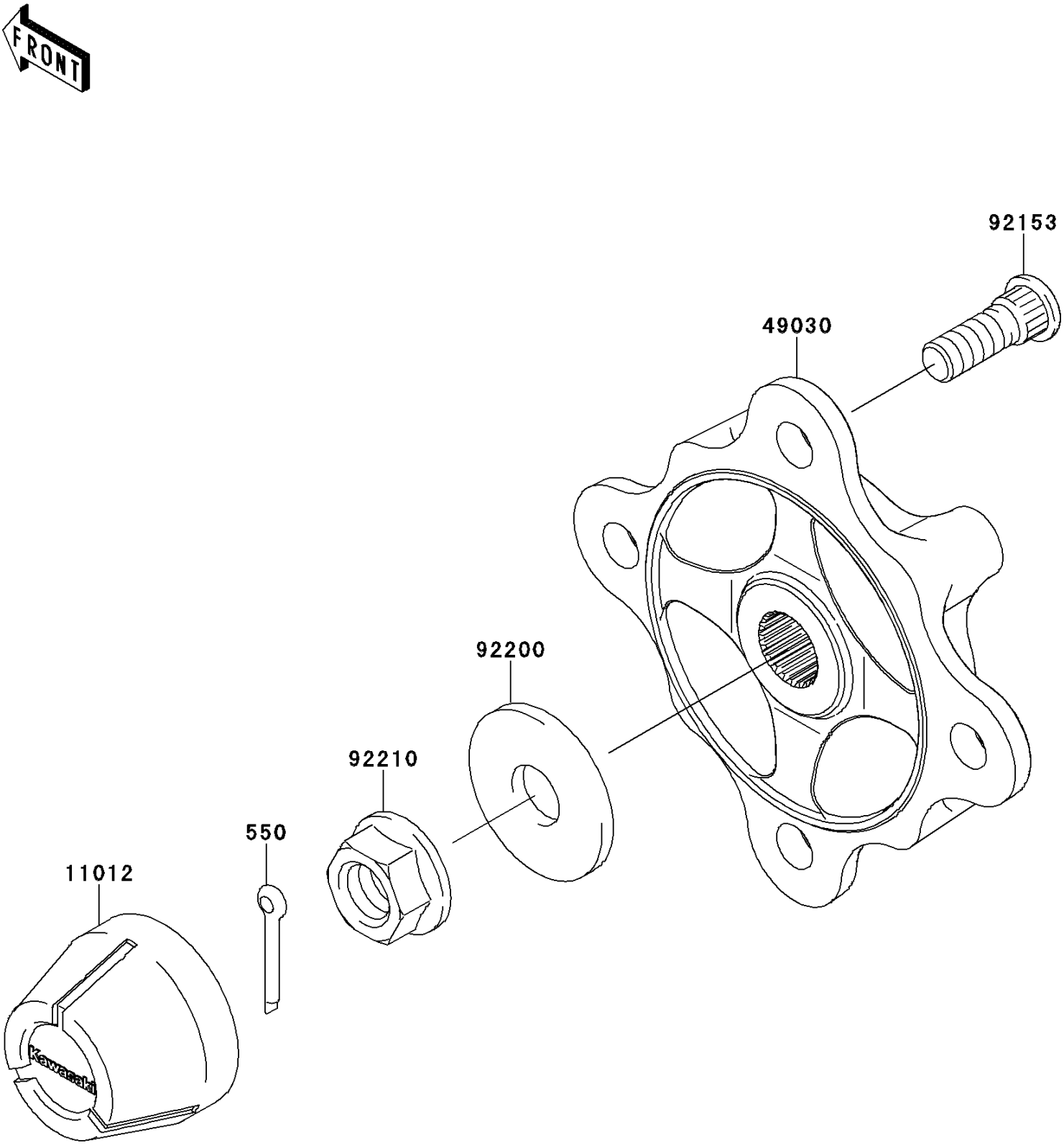

© 2024 Kawasaki Motors Corp., U.S.A.

2011 TERYX® 750 FI 4x4 LE PARTS LIST

Front Hubs/Brakes

ITEM NAME	PART NUMBER	QUANTITY
PIN-COTTER,4.0X30 (Ref # 550)	550AA4030	2
CAP,WHEEL (Ref # 11012)	11012-1969	2
HUB,FR (Ref # 49030)	49030-0041	2
BOLT,12MM (Ref # 92153)	92153-1915	8
WASHER,18.5X52X4.5 (Ref # 92200)	92200-0425	2
NUT,FLANGED,18MM (Ref # 92210)	92210-0132	2

© 2024 Kawasaki Motors Corp., U.S.A.