Mule 3010 Diesel 4X4 PARTS DIAGRAM

Converter Cover

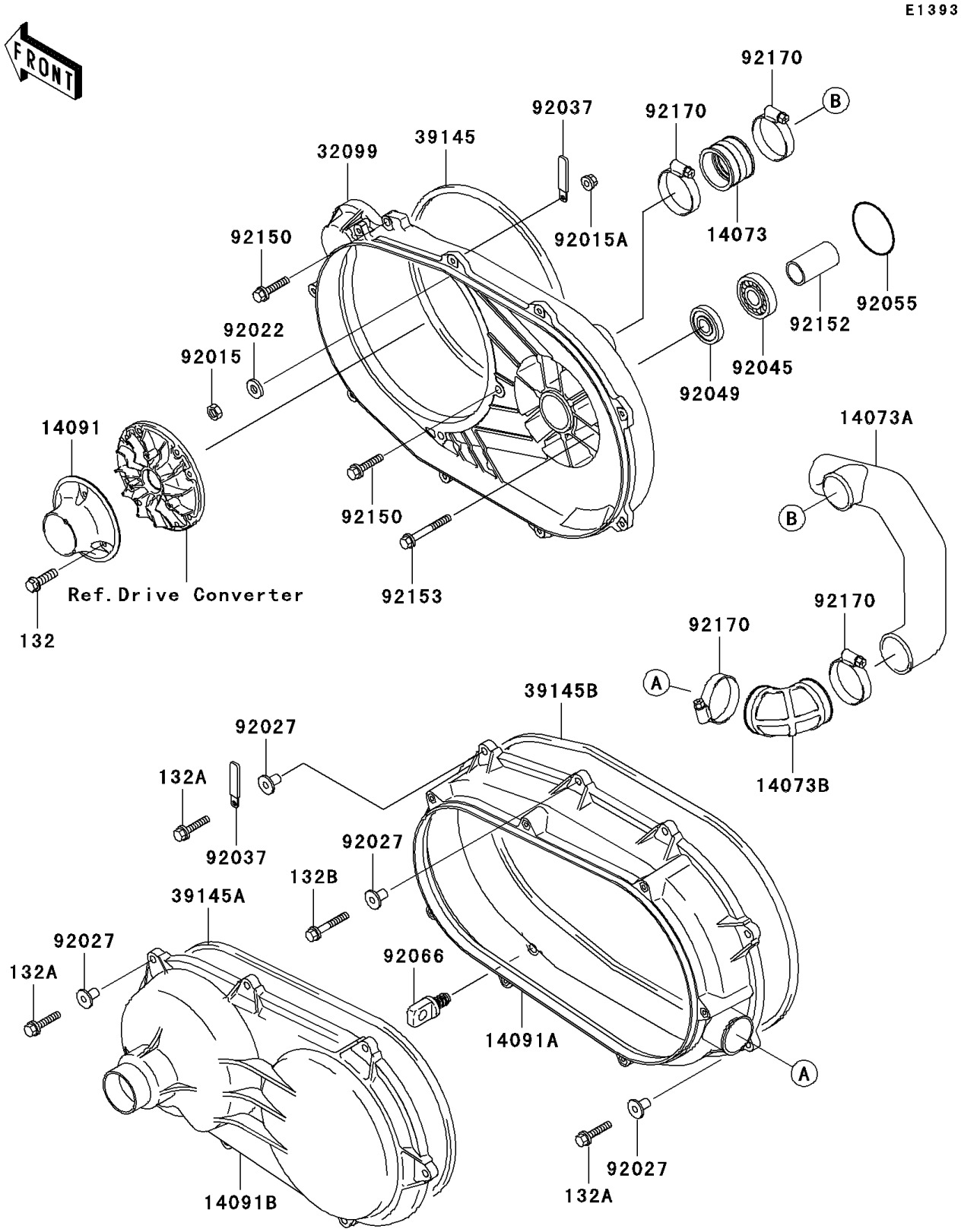

© 2024 Kawasaki Motors Corp., U.S.A.

Mule 3010 Diesel 4X4 PARTS LIST

Converter Cover

ITEM NAME	PART NUMBER	QUANTITY
BOLT-FLANGED-SMALL (Ref # 132)	132G0620	3
BOLT-FLANGED-SMALL (Ref # 132A)	132J0630	15
BOLT-FLANGED-SMALL (Ref # 132B)	132J0635	1
DUCT (Ref # 14073)	14073-1324	1
DUCT (Ref # 14073A)	14073-1856	1
DUCT (Ref # 14073B)	14073-1857	1
COVER,FAN (Ref # 14091)	14091-1520	1
COVER,MIDDLE (Ref # 14091A)	14091-1555	1
COVER,BELT CONVERTER (Ref # 14091B)	14091-1556	1
CASE,BELT CONVERTER (Ref # 32099)	32099-1215	1
TRIM-SEAL,BELT CONVERTER CASE (Ref # 39145)	39145-1115	1
TRIM-SEAL,MIDDLE COVER (Ref # 39145A)	39145-1117	1
TRIM-SEAL,BELT CONVERTER (Ref # 39145B)	39145-1126	1
NUT,LOCK,10MM,BLACK (Ref # 92015)	92015-1189	1
NUT,LOCK,FLANGED,6MM (Ref # 92015A)	92015-1675	1
WASHER,10.5X18X2.5 (Ref # 92022)	92022-1876	1
COLLAR,L=14.1 (Ref # 92027)	92027-1920	16
CLAMP,L=60 (Ref # 92037)	92037-1069	2
BEARING-BALL,62/28LLB (Ref # 92045)	92045-1378	1
SEAL-OIL,TC28X47X7 (Ref # 92049)	92049-1297	1
RING-O,67.6X3.5 (Ref # 92055)	92055-1327	1
PLUG,DRAIN,11X19 (Ref # 92066)	92066-1580	1
BOLT,FLANGED,8X28 (Ref # 92150)	92150-1103	5
COLLAR,28.1X34X63.6 (Ref # 92152)	92152-1177	1
BOLT (Ref # 92153)	92153-1276	3
CLAMP (Ref # 92170)	92170-1764	4

© 2024 Kawasaki Motors Corp., U.S.A.