Mule 550

PARTS DIAGRAM

Crankshaft/Piston(s)

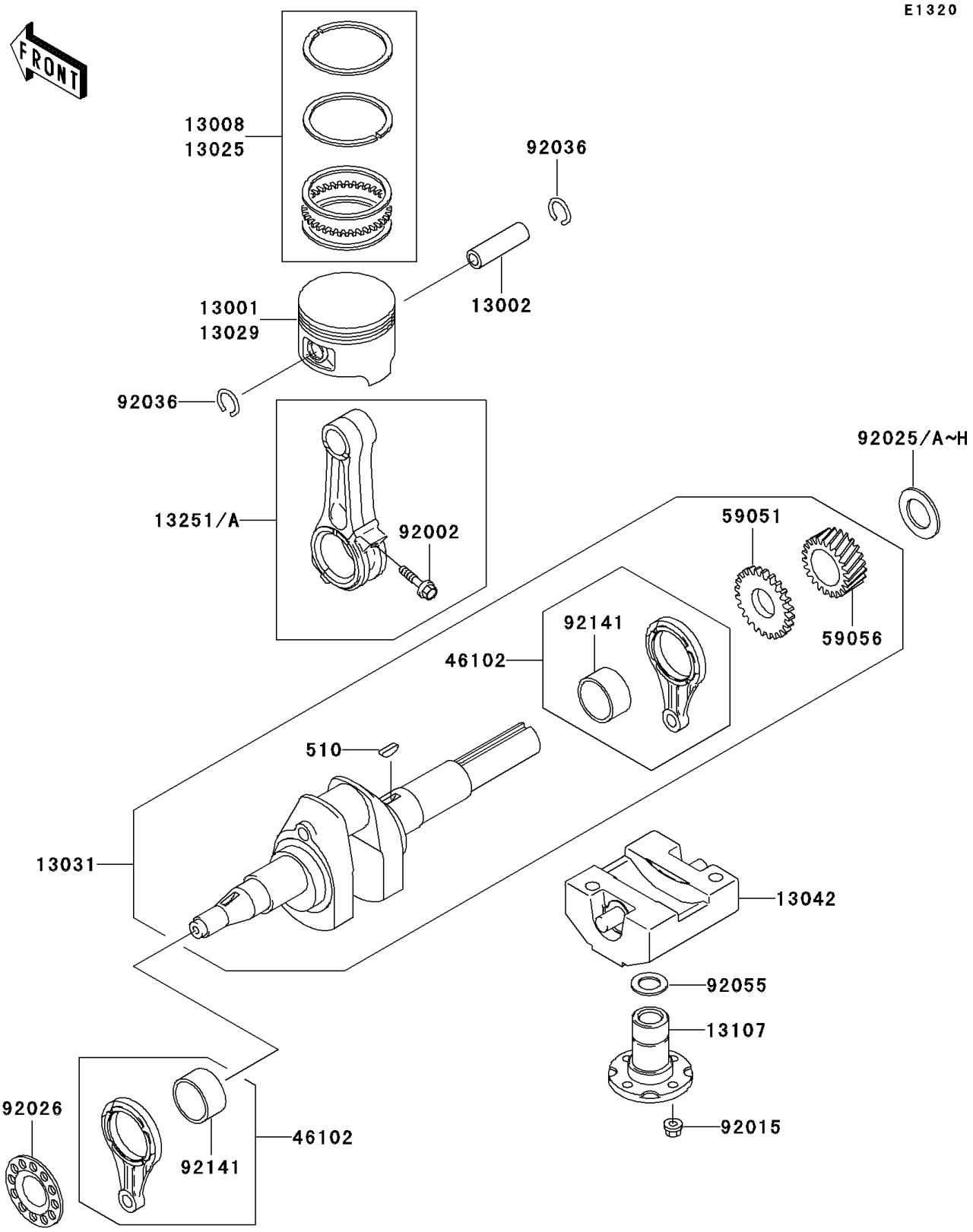

© 2026 Kawasaki Motors Corp., U.S.A.

Mule 550

PARTS LIST

Crankshaft/Piston(s)

Kawasaki
Let the Good Times Roll®

ITEM NAME	PART NUMBER	QUANTITY
KEY-WOODRUFF (Ref # 510)	510A5100	1
PISTON-ENGINE,STD (Ref # 13001)	13001-2125	1
PIN-PISTON (Ref # 13002)	13002-2069	1
RING-SET-PISTON,STD (Ref # 13008)	13008-6007	1
RING-SET-PISTON L,0.50 (Ref # 13025)	13025-2074	AR
PISTON-ENGINE L,0.50 (Ref # 13029)	13029-2101	AR
CRANKSHAFT-COMP (Ref # 13031)	13031-2060	1
WEIGHT (Ref # 13042)	13042-6009	1
SHAFT (Ref # 13107)	13107-2088	1
ROD-ASSY-CONNECTING,U/S=0.50 (Ref # 13251)	13251-6034	AR
ROD-ASSY-CONNECTING (Ref # 13251A)	13251-6056	1
ROD (Ref # 46102)	46102-6004	2
GEAR-SPUR (Ref # 59051)	59051-2097	1
GEAR-HELICAL (Ref # 59056)	59056-2993	1
BOLT (Ref # 92002)	92002-2053	2
NUT,FLANGED,6MM (Ref # 92015)	92015-1193	4
SHIM,T=1.13 (Ref # 92025)	92025-2168	AR
SHIM,T=1.18 (Ref # 92025A)	92025-2169	AR
SHIM,T=1.23 (Ref # 92025B)	92025-2170	AR
SHIM,T=1.28 (Ref # 92025C)	92025-2171	AR
SHIM,T=1.33 (Ref # 92025D)	92025-2172	AR
SHIM,T=1.38 (Ref # 92025E)	92025-2173	AR
SHIM,T=1.43 (Ref # 92025F)	92025-2174	AR
SHIM,T=1.48 (Ref # 92025G)	92025-2175	AR
SHIM,T=1.53 (Ref # 92025H)	92025-2207	AR
SPACER (Ref # 92026)	92026-2052	1
RING-SNAP,PISTON PIN (Ref # 92036)	92036-008	2
RING-O (Ref # 92055)	92055-2072	1
BEARING-PLANE (Ref # 92141)	92141-2090	2

© 2026 Kawasaki Motors Corp., U.S.A.