Mule 2520 Turf PARTS DIAGRAM

Muffler(s)

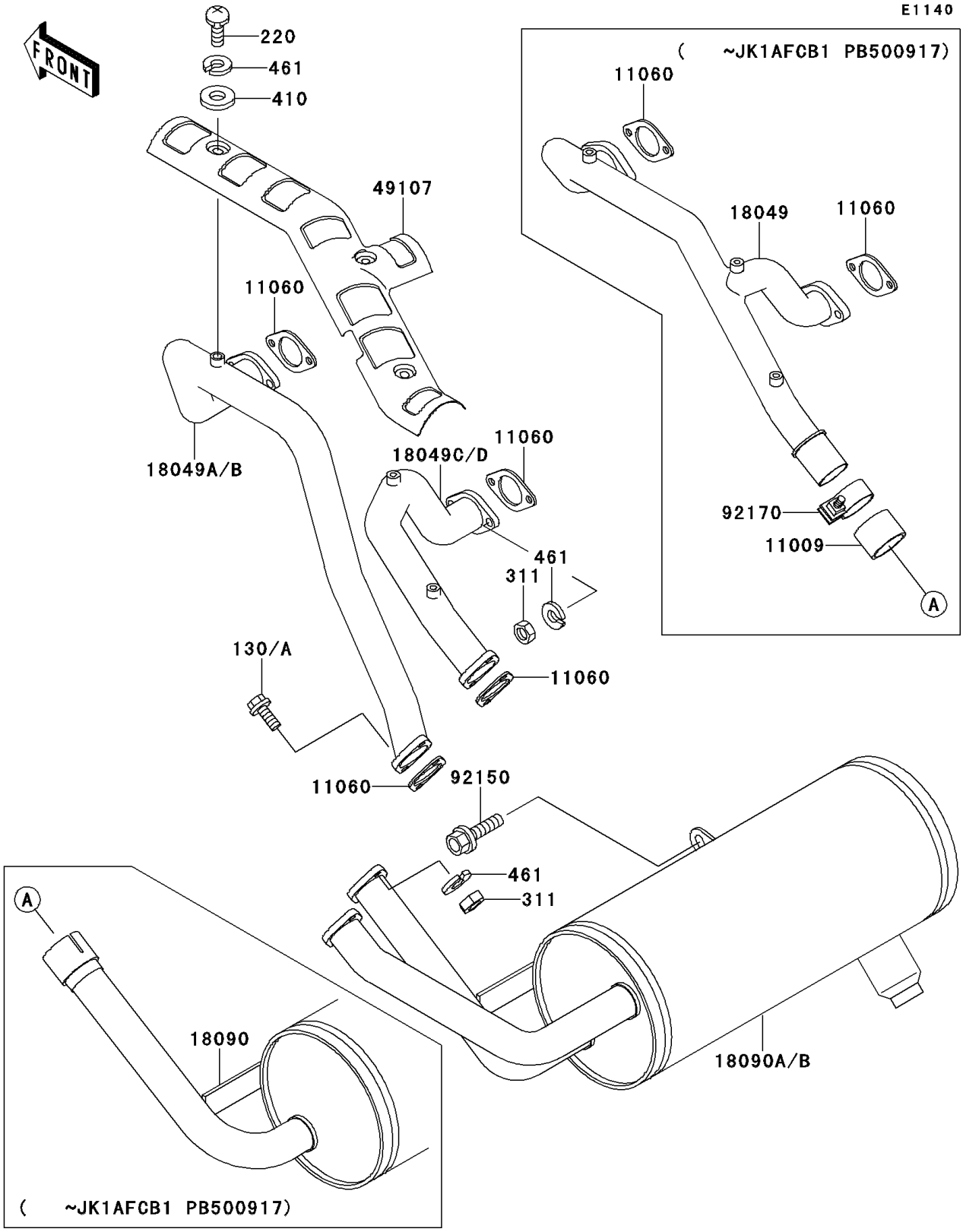

© 2024 Kawasaki Motors Corp., U.S.A.

Mule 2520 Turf PARTS LIST

Muffler(s)

ITEM NAME	PART NUMBER	QUANTITY
BOLT-FLANGED,6X25 (Ref # 130)	130G0625	4
SCREW-PAN-CROS,6X10,BLACK (Ref # 220)	220C0610	3
NUT-HEX,6MM (Ref # 311)	311G0600	8
WASHER-PLAIN-SMALL,6MM (Ref # 410)	410B0600	3
WASHER-SPRING,6MM (Ref # 461)	461F0600	11
GASKET,EXHAUST PIPE (Ref # 11060)	11060-2079	4
PIPE-EXHAUST,FR (Ref # 18049A)	18049-1735	1
PIPE-EXHAUST,RR (Ref # 18049C)	18049-1736	1
BODY-COMP-MUFFLER (Ref # 18090A)	18090-1451	1
COVER-EXHAUST PIPE (Ref # 49107)	49107-1089	1
BOLT (Ref # 92150)	92150-1158	3

© 2024 Kawasaki Motors Corp., U.S.A.