Mule 1000 PARTS DIAGRAM

Air Cleaner

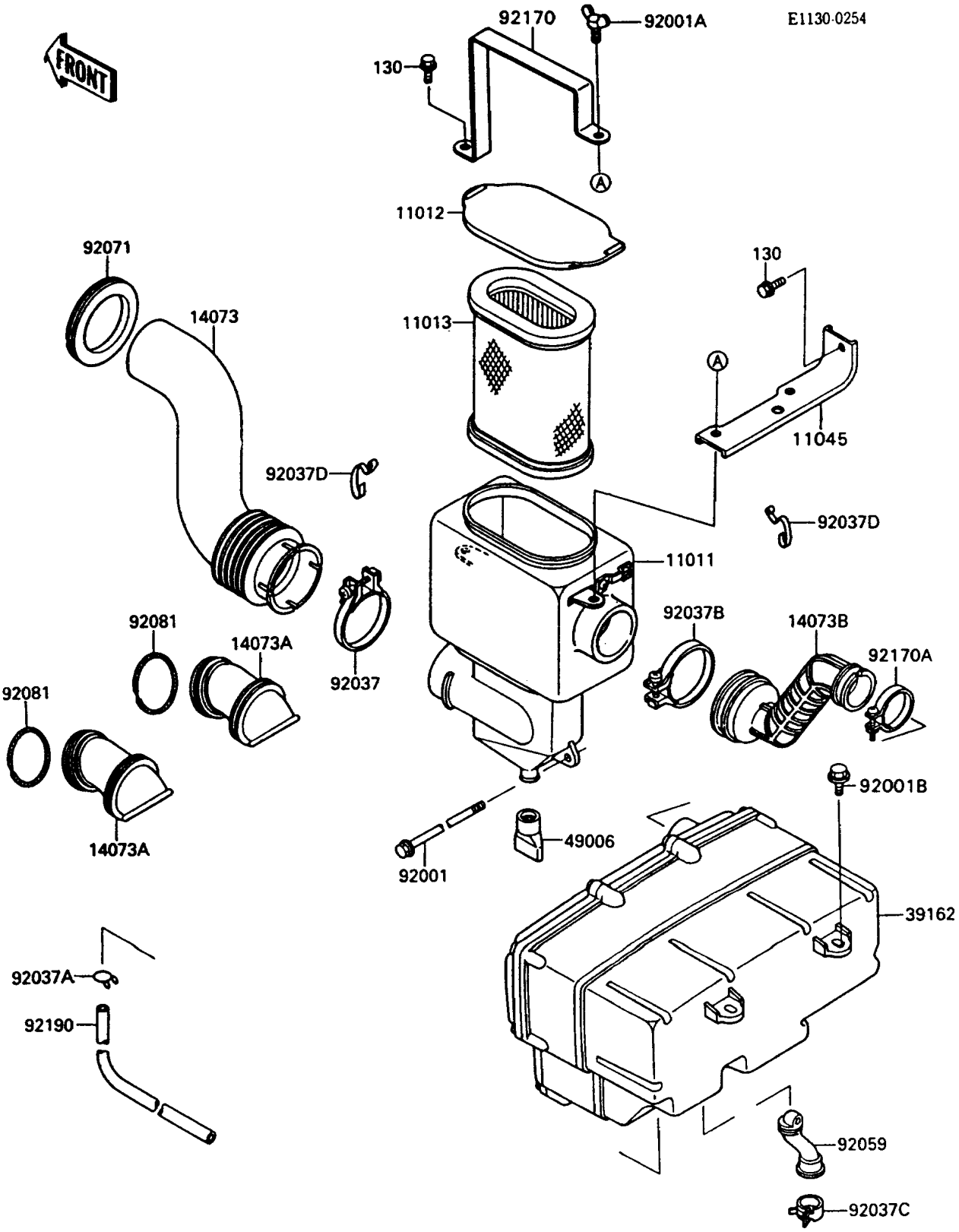

© 2024 Kawasaki Motors Corp., U.S.A.

Mule 1000 PARTS LIST

Air Cleaner

ITEM NAME	PART NUMBER	QUANTITY
BOLT-FLANGED (Ref # 130)	130J0610	2
CASE-AIR FILTER (Ref # 11011)	11011-1350	1
CAP,AIR FILTER (Ref # 11012)	11012-1708	1
ELEMENT-AIR FILTER (Ref # 11013)	11013-1207	1
BRACKET,AIR FILTER CASE (Ref # 11045)	11045-1938	1
DUCT,AIR INTAKE (Ref # 14073)	14073-1320	1
DUCT,SILENSER (Ref # 14073A)	14073-1321	2
DUCT,FILTER CASE (Ref # 14073B)	14073-1455	1
SILENCER-INTAKE (Ref # 39162)	39162-1058	1
BOOT (Ref # 49006)	49006-1199	1
BOLT,6X162 (Ref # 92001)	92001-1501	1
BOLT,WING,6X15 (Ref # 92001A)	92001-1703	1
BOLT,6X16 (Ref # 92001B)	92001-1950	2
CLAMP,AIR FILTER (Ref # 92037)	92037-1409	1
CLAMP,TUBE (Ref # 92037A)	92037-147	1
CLAMP,RESERVE TANK (Ref # 92037B)	92037-1706	1
CLAMP (Ref # 92037C)	92037-1730	1
CLAMP,AIR FILTER (Ref # 92037D)	92037-1783	2
TUBE,BREATHER (Ref # 92059)	92059-1545	1
GROMMET (Ref # 92071)	92071-1158	1
SPRING,AIR FILTER DUCT (Ref # 92081)	92081-1422	2
CLAMP,CAP (Ref # 92170)	92170-1216	1
CLAMP (Ref # 92170A)	92170-1279	1
TUBE (Ref # 92190)	92190-1182	1

© 2024 Kawasaki Motors Corp., U.S.A.