2011 KLX®110 PARTS DIAGRAM

Accessory

F2910

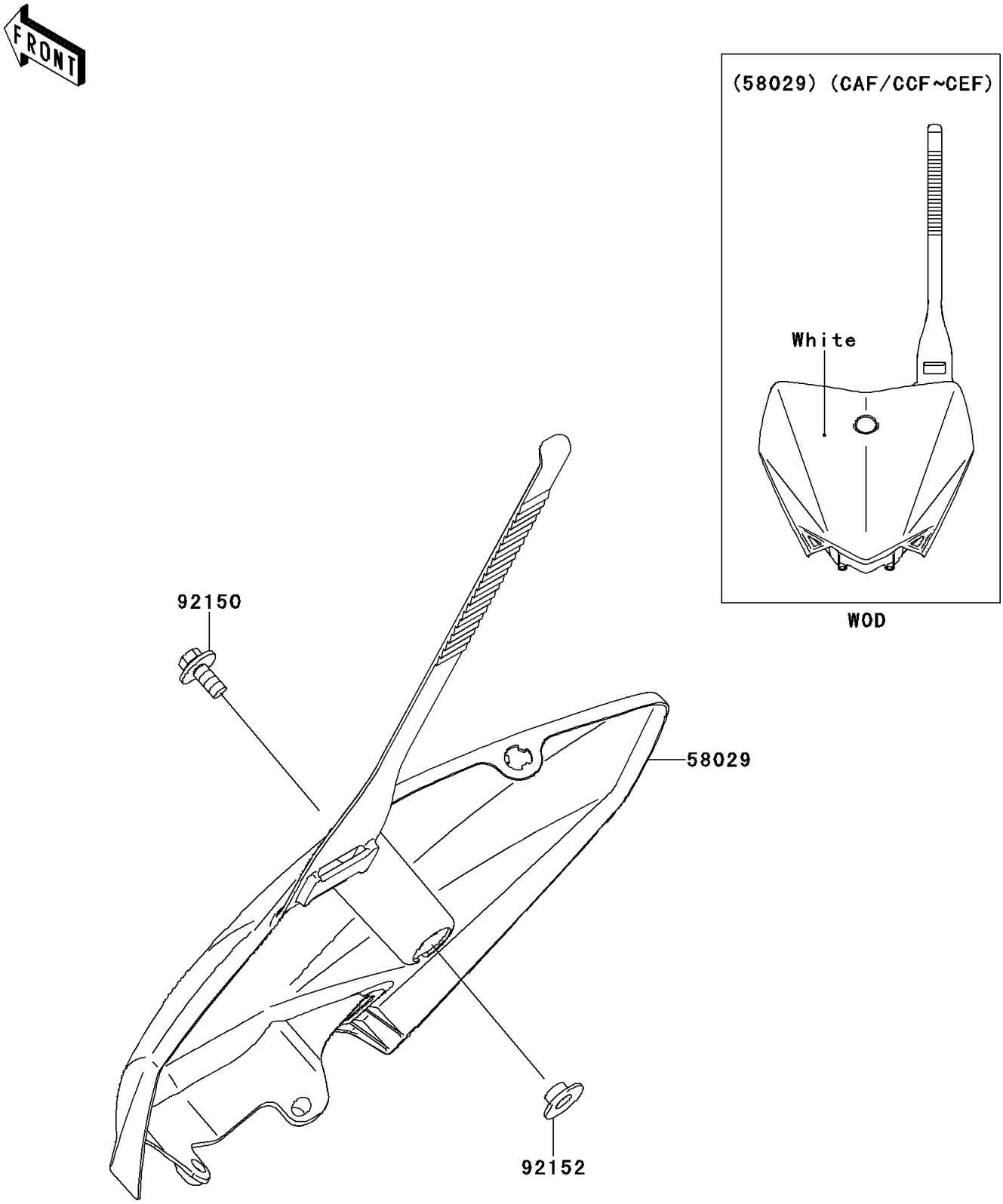

© 2024 Kawasaki Motors Corp., U.S.A.

2011 KLX®110 PARTS LIST

Accessory

ITEM NAME	PART NUMBER	QUANTITY
PLATE-NUMBER,B.WHITE (Ref # 58029)	58029-0010-266	1
BOLT,6X14 (Ref # 92150)	92150-1340	1
COLLAR (Ref # 92152)	92152-0427	1

© 2024 Kawasaki Motors Corp., U.S.A.