2015 NINJA® ZX™-14R ABS PARTS DIAGRAM

Battery Case

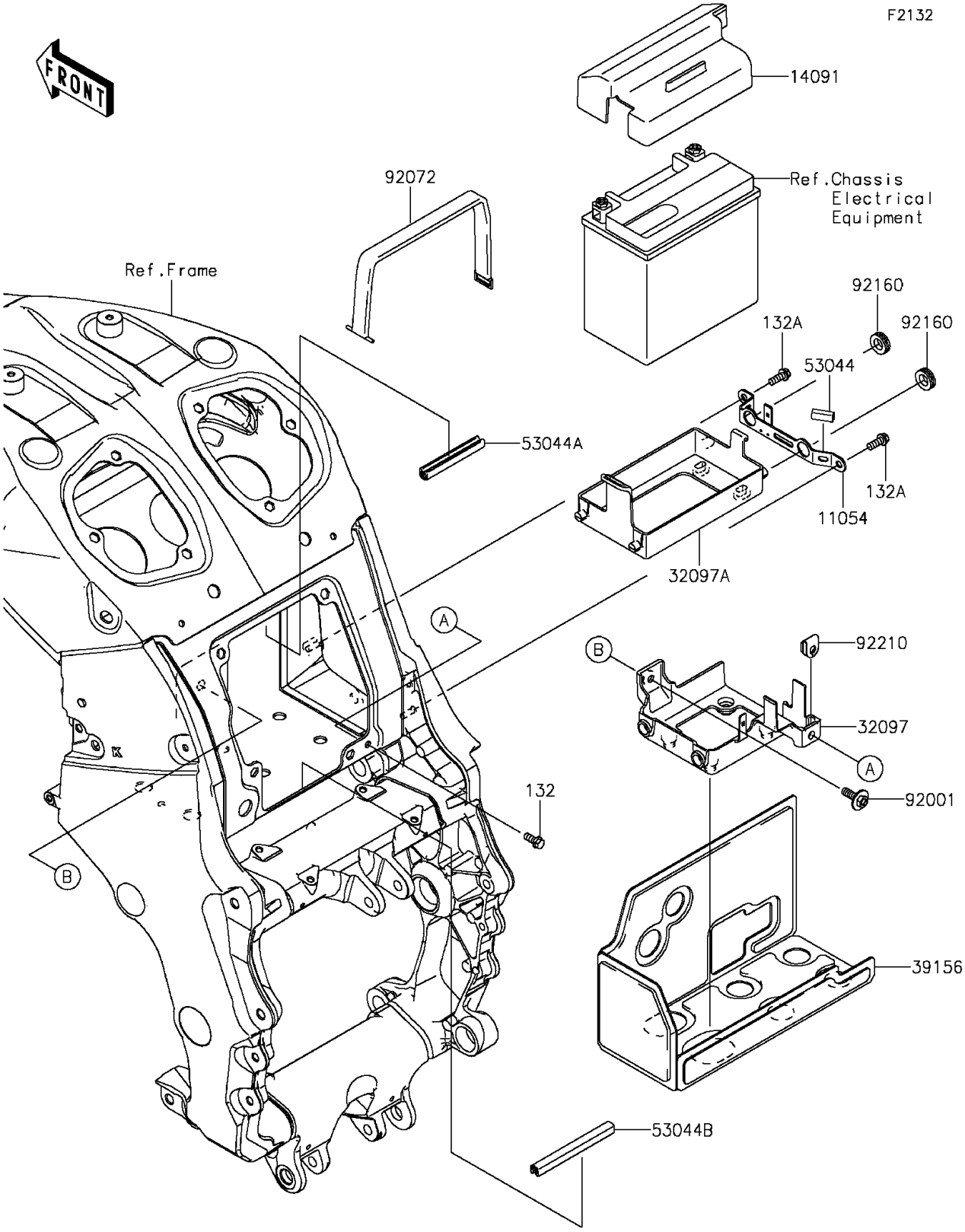

© 2024 Kawasaki Motors Corp., U.S.A.

2015 NINJA® ZX™-14R ABS PARTS LIST

Battery Case

ITEM NAME	PART NUMBER	QUANTITY

© 2024 Kawasaki Motors Corp., U.S.A.