2014 NINJA® ZX™-6R PARTS DIAGRAM

Generator

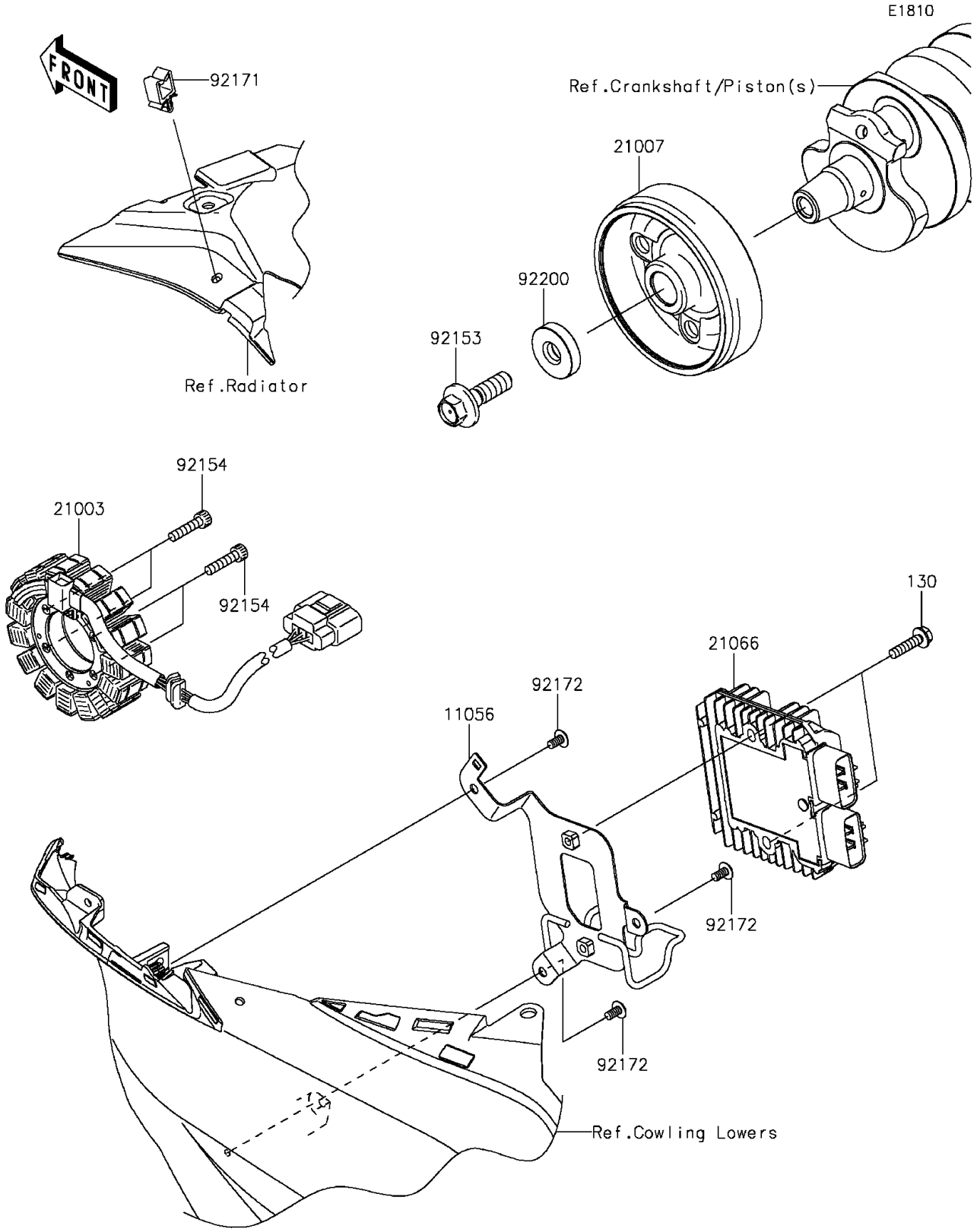

© 2024 Kawasaki Motors Corp., U.S.A.

2014 NINJA® ZX™-6R PARTS LIST

Generator

ITEM NAME	PART NUMBER	QUANTITY

© 2024 Kawasaki Motors Corp., U.S.A.