2013 VULCAN® 900 CUSTOM PARTS DIAGRAM

Decals(White/Ebony)(CDFA)

F2861C

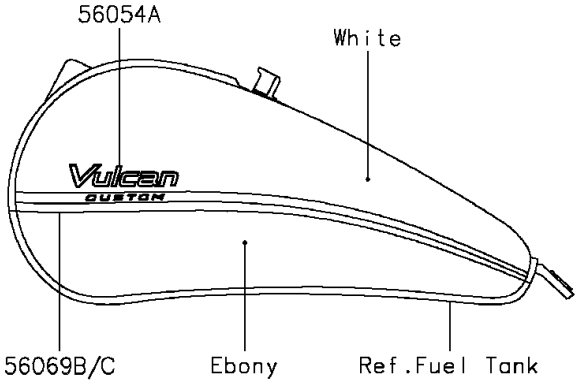

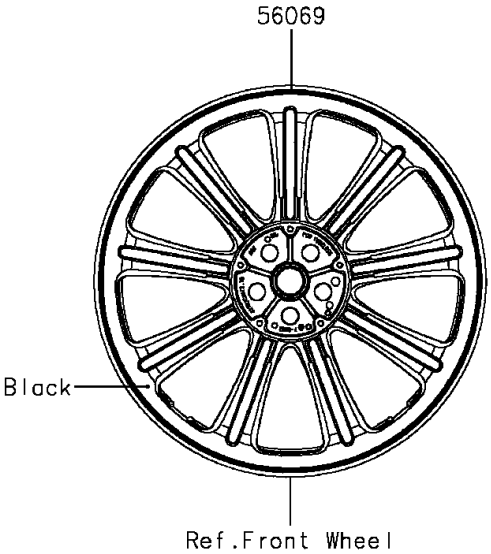

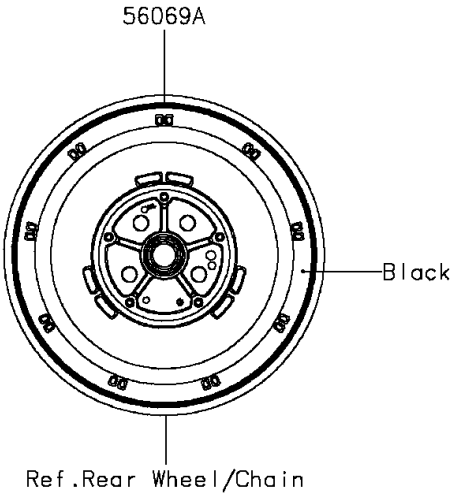

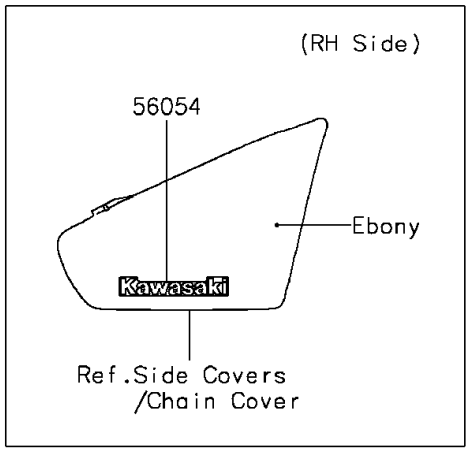

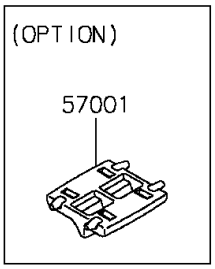

© 2024 Kawasaki Motors Corp., U.S.A.

2013 VULCAN® 900 CUSTOM PARTS LIST

Decals(White/Ebony)(CDFA)

ITEM NAME	PART NUMBER	QUANTITY
MARK,SIDE COVER,KAWASAKI (Ref # 56054)	56054-1075	1
MARK,FUEL TANK,VULCAN (Ref # 56054A)	56054-1142	2
PATTERN,FR WHEEL,RED (Ref # 56069)	56069-0886	2
PATTERN,RR WHEEL,RED (Ref # 56069A)	56069-0887	2
PATTERN,FUEL TANK,LH (Ref # 56069B)	56069-2616	1
PATTERN,FUEL TANK,RH (Ref # 56069C)	56069-2617	1
RIM STRIPE APPLICATOR (Ref # 57001)	57001-1752	AR

© 2024 Kawasaki Motors Corp., U.S.A.