2013 NINJA® ZX™-10R ABS PARTS DIAGRAM

Engine Cover(s)

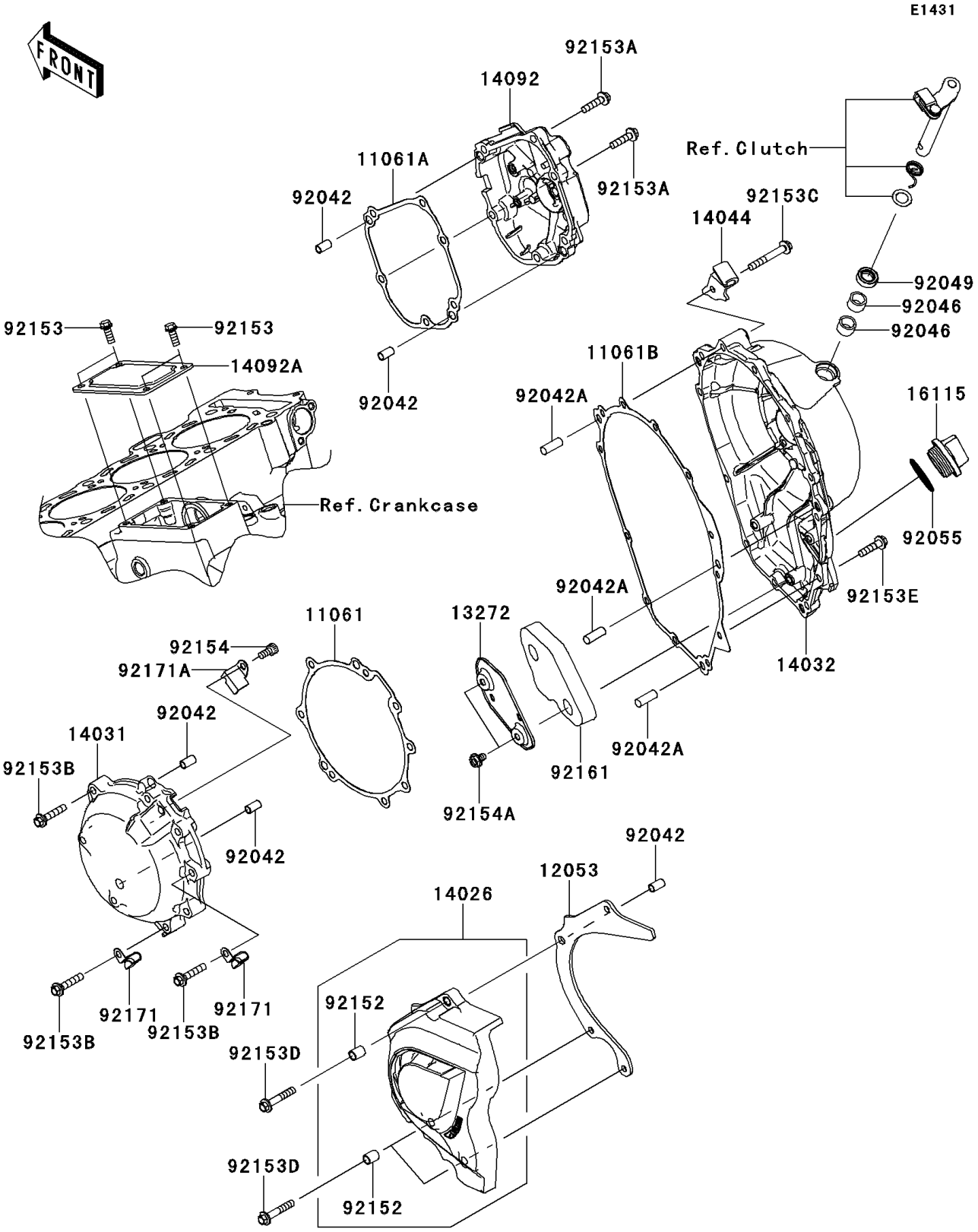

© 2024 Kawasaki Motors Corp., U.S.A.

2013 NINJA® ZX™-10R ABS PARTS LIST

Engine Cover(s)

ITEM NAME	PART NUMBER	QUANTITY
GASKET,GENERATOR COVER (Ref # 11061)	11061-0441	1
GASKET,PULSER COVER (Ref # 11061A)	11061-0442	1
GASKET (Ref # 11061B)	11061-0735	1
GUIDE-CHAIN (Ref # 12053)	12053-0176	1
PLATE (Ref # 13272)	13272-0892	1
COVER-CHAIN (Ref # 14026)	14026-0083	1
COVER-GENERATOR (Ref # 14031)	14031-0555	1
COVER-CLUTCH (Ref # 14032)	14032-0560	1
HOLDER-CABLE (Ref # 14044)	14044-0046	1
COVER,PULSER (Ref # 14092)	14092-0152	1
COVER,STARTER (Ref # 14092A)	14092-0153	1
CAP-OIL FILLER (Ref # 16115)	16115-1009	1
PIN,DOWEL,6.3X8X14 (Ref # 92042)	92042-007	5
PIN,DOWEL,8X22 (Ref # 92042A)	92042-044	3
BEARING-NEEDLE,HK1210FM (Ref # 92046)	92046-0034	2
SEAL-OIL,CLUTCH RELEASE (Ref # 92049)	92049-1475	1
RING-O,31.5X2.6 (Ref # 92055)	92055-049	1
COLLAR,7.5X9.5X12 (Ref # 92152)	92152-0887	3
BOLT,6X16 (Ref # 92153)	92153-0695	4
BOLT,FLANGED,6X25 (Ref # 92153A)	92153-1569	6
BOLT,FLANGED,6X30 (Ref # 92153B)	92153-1574	8
BOLT,FLANGED,6X45 (Ref # 92153C)	92153-1575	1
BOLT,FLANGED,6X35 (Ref # 92153D)	92153-1579	3
BOLT,FLANGED,6X25 (Ref # 92153E)	92153-1716	11
BOLT,SOCKET,6X12 (Ref # 92154)	92154-0040	1
BOLT,FLANGED,6X10 (Ref # 92154A)	92154-0492	2
DAMPER,CLUTCH COVER (Ref # 92161)	92161-0873	1
CLAMP (Ref # 92171)	92171-0534	2
CLAMP (Ref # 92171A)	92171-0938	1

© 2024 Kawasaki Motors Corp., U.S.A.