2014 NINJA® ZX™-10R ABS PARTS DIAGRAM

Valve(s)

E1210

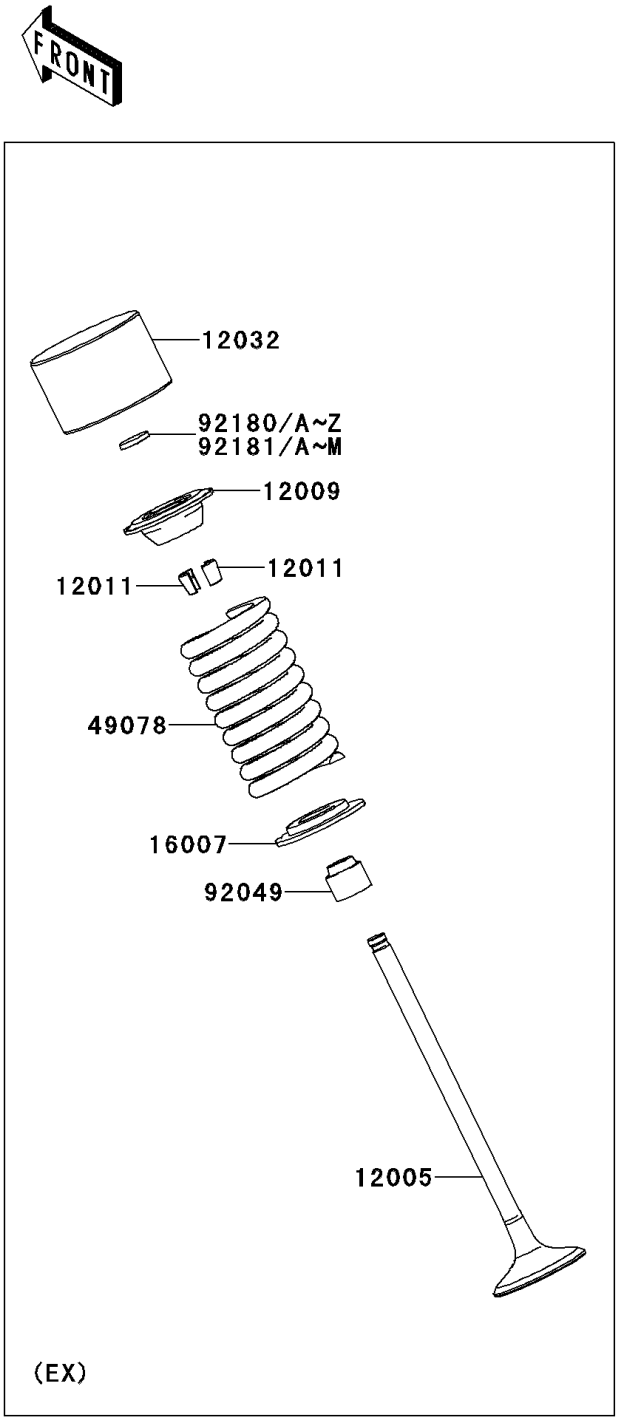

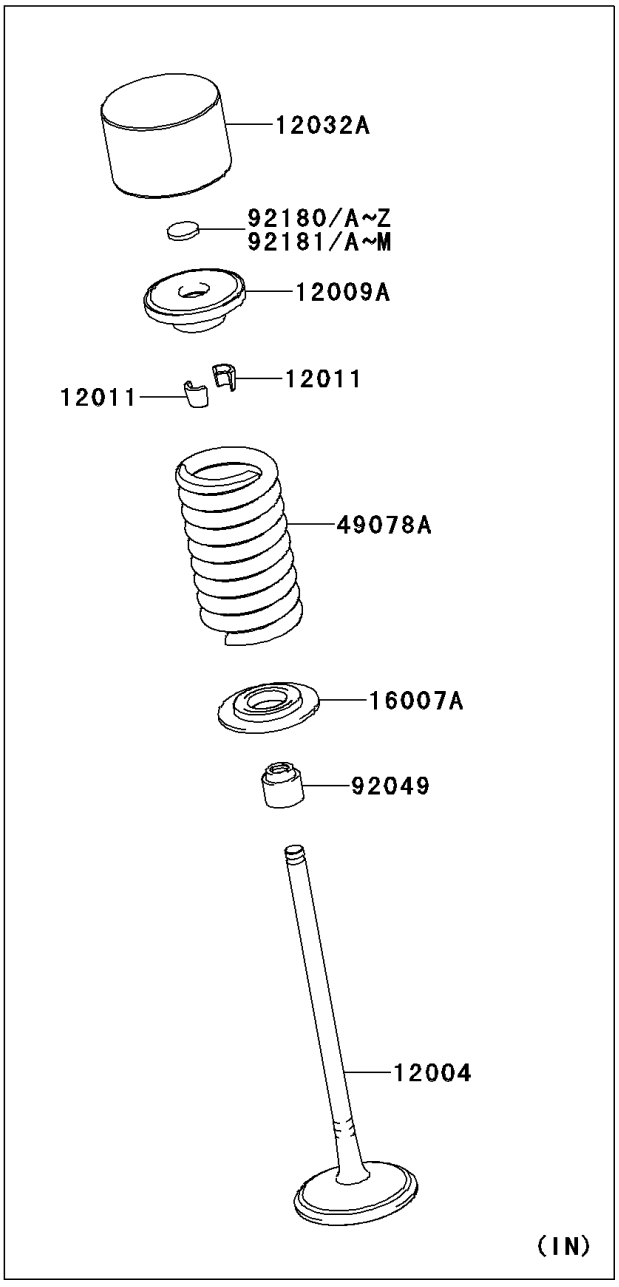

© 2024 Kawasaki Motors Corp., U.S.A.

2014 NINJA® ZX™-10R ABS PARTS LIST

Valve(s)

ITEM NAME	PART NUMBER	QUANTITY
VALVE-INTAKE (Ref # 12004)	12004-0044	8
VALVE-EXHAUST (Ref # 12005)	12005-0059	8
RETAINER-VALVE SPRING,EX (Ref # 12009)	12009-0017	8
RETAINER-VALVE SPRING,IN (Ref # 12009A)	12009-0708	8
COLLET (Ref # 12011)	12011-1053	32
TAPPET,D26.5,EX (Ref # 12032)	12032-0013	8
TAPPET,IN (Ref # 12032A)	12032-0015	8
SEAT-SPRINGEX (Ref # 16007)	16007-0003	8
SEAT-SPRING,IN (Ref # 16007A)	16007-0044	8
SPRING-ENGINE VALVE,EX (Ref # 49078)	49078-0078	8
SPRING-ENGINE VALVE,IN (Ref # 49078A)	49078-0709	8
SEAL-OIL,VSB 4.3 7.5 5.3 8.3 (Ref # 92049)	92049-1349	16
SHIM,T=1.300 (Ref # 92180)	92180-0108	16
SHIM,T=1.325 (Ref # 92180A)	92180-0109	AR
SHIM,T=1.350 (Ref # 92180B)	92180-0110	AR
SHIM,T=1.375 (Ref # 92180C)	92180-0111	AR
SHIM,T=1.400 (Ref # 92180D)	92180-0112	AR
SHIM,T=1.425 (Ref # 92180E)	92180-0113	AR
SHIM,T=1.450 (Ref # 92180F)	92180-0114	AR
SHIM,T=1.475 (Ref # 92180G)	92180-0115	AR
SHIM,T=1.500 (Ref # 92180H)	92180-0116	AR
SHIM,T=1.525 (Ref # 92180I)	92180-0117	AR
SHIM,T=1.550 (Ref # 92180J)	92180-0118	AR
SHIM,T=1.575 (Ref # 92180K)	92180-0119	AR
SHIM,T=1.600 (Ref # 92180L)	92180-0120	AR
SHIM,T=1.625 (Ref # 92180M)	92180-0121	AR
SHIM,T=1.650 (Ref # 92180N)	92180-0122	AR
SHIM,T=1.675 (Ref # 92180O)	92180-0123	AR
SHIM,T=1.700 (Ref # 92180P)	92180-0124	AR

© 2024 Kawasaki Motors Corp., U.S.A.

2014 NINJA® ZX™-10R ABS PARTS LIST

Valve(s)

ITEM NAME	PART NUMBER	QUANTITY
SHIM,T=1.725 (Ref # 92180Q)	92180-0125	AR
SHIM,T=1.750 (Ref # 92180R)	92180-0126	AR
SHIM,T=1.775 (Ref # 92180S)	92180-0127	AR
SHIM,T=1.800 (Ref # 92180T)	92180-0128	AR
SHIM,T=1.825 (Ref # 92180U)	92180-0129	AR
SHIM,T=1.850 (Ref # 92180V)	92180-0130	AR
SHIM,T=1.875 (Ref # 92180W)	92180-0131	AR
SHIM,T=1.900 (Ref # 92180X)	92180-0132	AR
SHIM,T=1.925 (Ref # 92180Y)	92180-0133	AR
SHIM,T=1.950 (Ref # 92180Z)	92180-0134	AR
SHIM,T=1.975 (Ref # 92181)	92180-0135	AR
SHIM,T=2.000 (Ref # 92181A)	92180-0136	AR
SHIM,T=2.025 (Ref # 92181B)	92180-0137	AR
SHIM,T=2.050 (Ref # 92181C)	92180-0138	AR
SHIM,T=2.075 (Ref # 92181D)	92180-0139	AR
SHIM,T=2.100 (Ref # 92181E)	92180-0140	AR
SHIM,T=2.125 (Ref # 92181F)	92180-0141	AR
SHIM,T=2.150 (Ref # 92181G)	92180-0142	AR
SHIM,T=2.175 (Ref # 92181H)	92180-0143	AR
SHIM,T=2.200 (Ref # 92181I)	92180-0144	AR
SHIM,T=2.225 (Ref # 92181J)	92180-0145	AR
SHIM,T=2.250 (Ref # 92181K)	92180-0146	AR
SHIM,T=2.275 (Ref # 92181L)	92180-0147	AR
SHIM,T=2.300 (Ref # 92181M)	92180-0148	AR

© 2024 Kawasaki Motors Corp., U.S.A.