2015 VULCAN® 900 CLASSIC LT PARTS DIAGRAM

Oil Pump

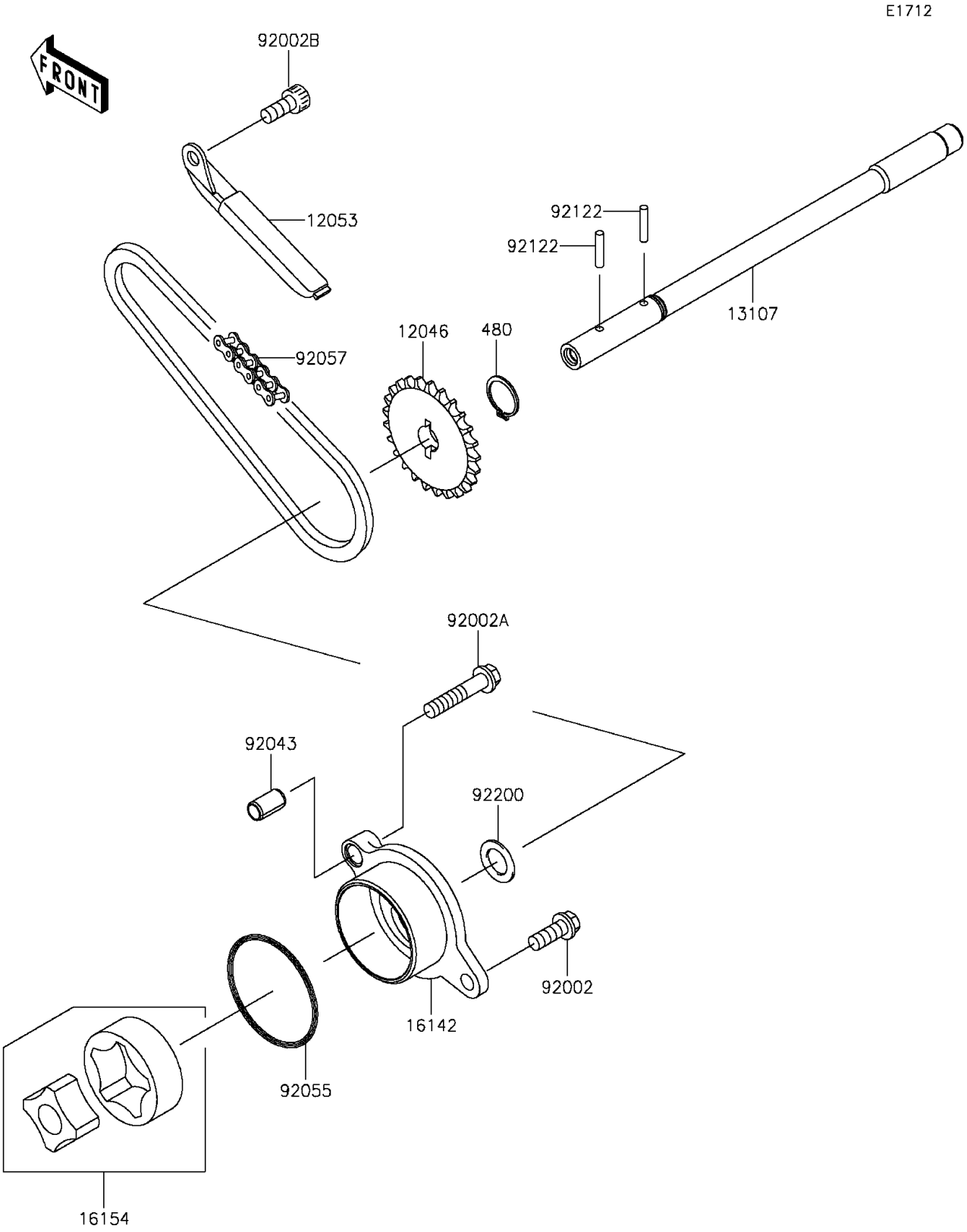

© 2024 Kawasaki Motors Corp., U.S.A.

2015 VULCAN® 900 CLASSIC LT PARTS LIST

Oil Pump

ITEM NAME	PART NUMBER	QUANTITY

© 2024 Kawasaki Motors Corp., U.S.A.