# 2013 VULCAN® 900 CLASSIC

## PARTS DIAGRAM

### Rear Brake

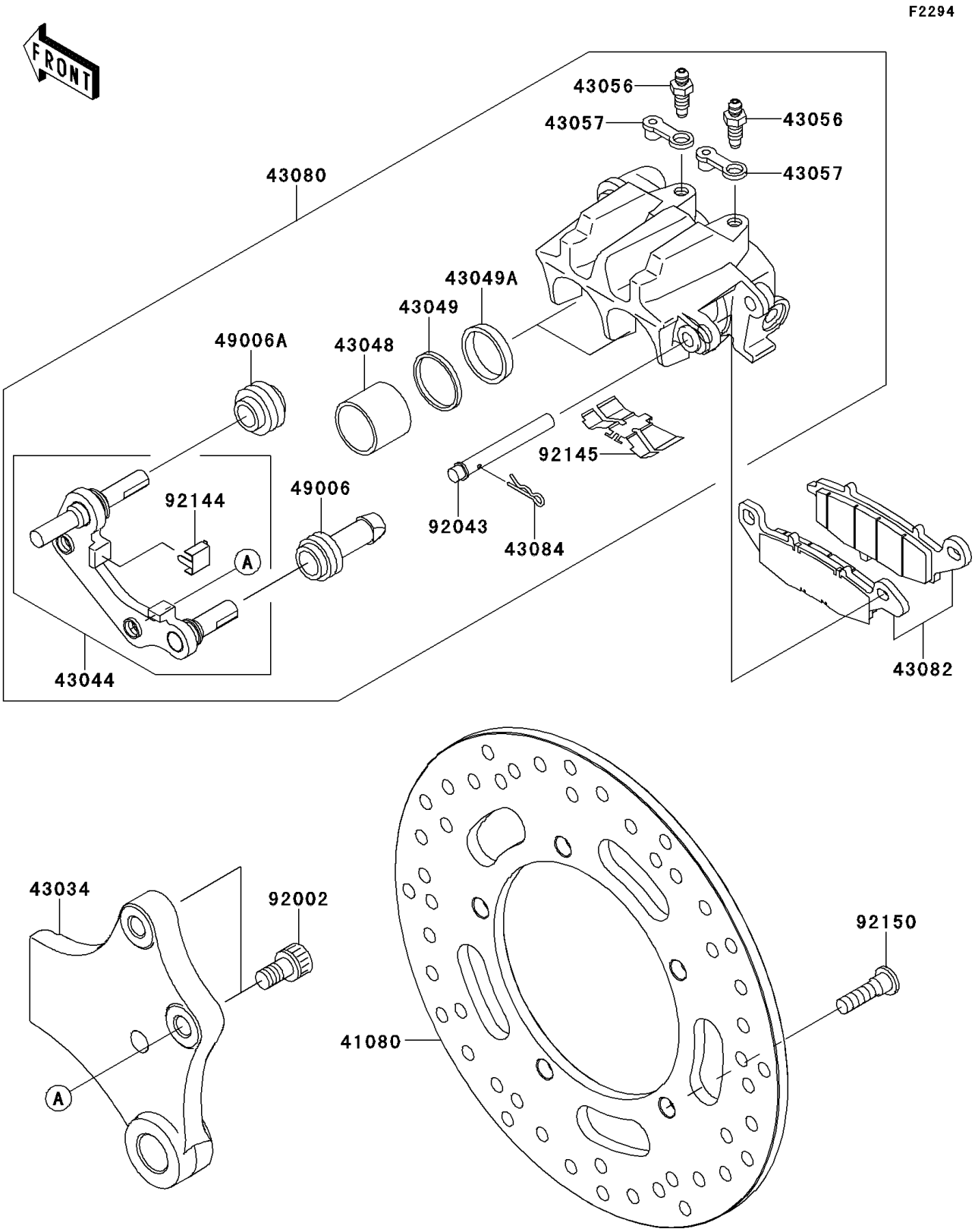


© 2026 Kawasaki Motors Corp., U.S.A.

# 2013 VULCAN® 900 CLASSIC

## PARTS LIST

### Rear Brake

| ITEM NAME | PART NUMBER | QUANTITY |
|---|---|---|
| DISC,RR,SILVER (Ref # 41080) | 41080-0093-CM | 1 |
| HOLDER-BRAKE,REAR CALIPER (Ref # 43034) | 43034-0061 | 1 |
| HOLDER-COMP-CALIPER,RR (Ref # 43044) | 43044-1134 | 1 |
| PISTON-CALIPER (Ref # 43048) | 43048-1094 | 2 |
| PACKING (Ref # 43049) | 43049-1068 | 2 |
| PACKING,PISTON SEAL (Ref # 43049A) | 43049-1092 | 2 |
| BREATHER-BRAKE (Ref # 43056) | 43056-0007 | 2 |
| CAP-BREATHER (Ref # 43057) | 43057-003 | 2 |
| CALIPER-SUB-ASSY,RR,BLACK (Ref # 43080) | 43080-5098-DJ | 1 |
| PAD-ASSY-BRAKE (Ref # 43082) | 43082-0063 | 1 |
| CLAMP,PAD (Ref # 43084) | 43084-003 | 1 |
| BOOT,CALIPER (Ref # 49006) | 49006-1094 | 1 |
| BOOT,CALIPER (Ref # 49006A) | 49006-1095 | 1 |
| BOLT,SOCKET,10X17 (Ref # 92002) | 92002-1713 | 2 |
| PIN,PAD (Ref # 92043) | 92043-1640 | 1 |
| SPRING,STOPPER (Ref # 92144) | 92144-1831 | 1 |
| SPRING,PAD (Ref # 92145) | 92145-1382 | 1 |
| BOLT,SOCKET,8X30 (Ref # 92150) | 92150-1771 | 5 |

© 2026 Kawasaki Motors Corp., U.S.A.