2013 VULCAN 900 CLASSIC (Canadian) PARTS DIAGRAM

Suspension/Shock Absorber

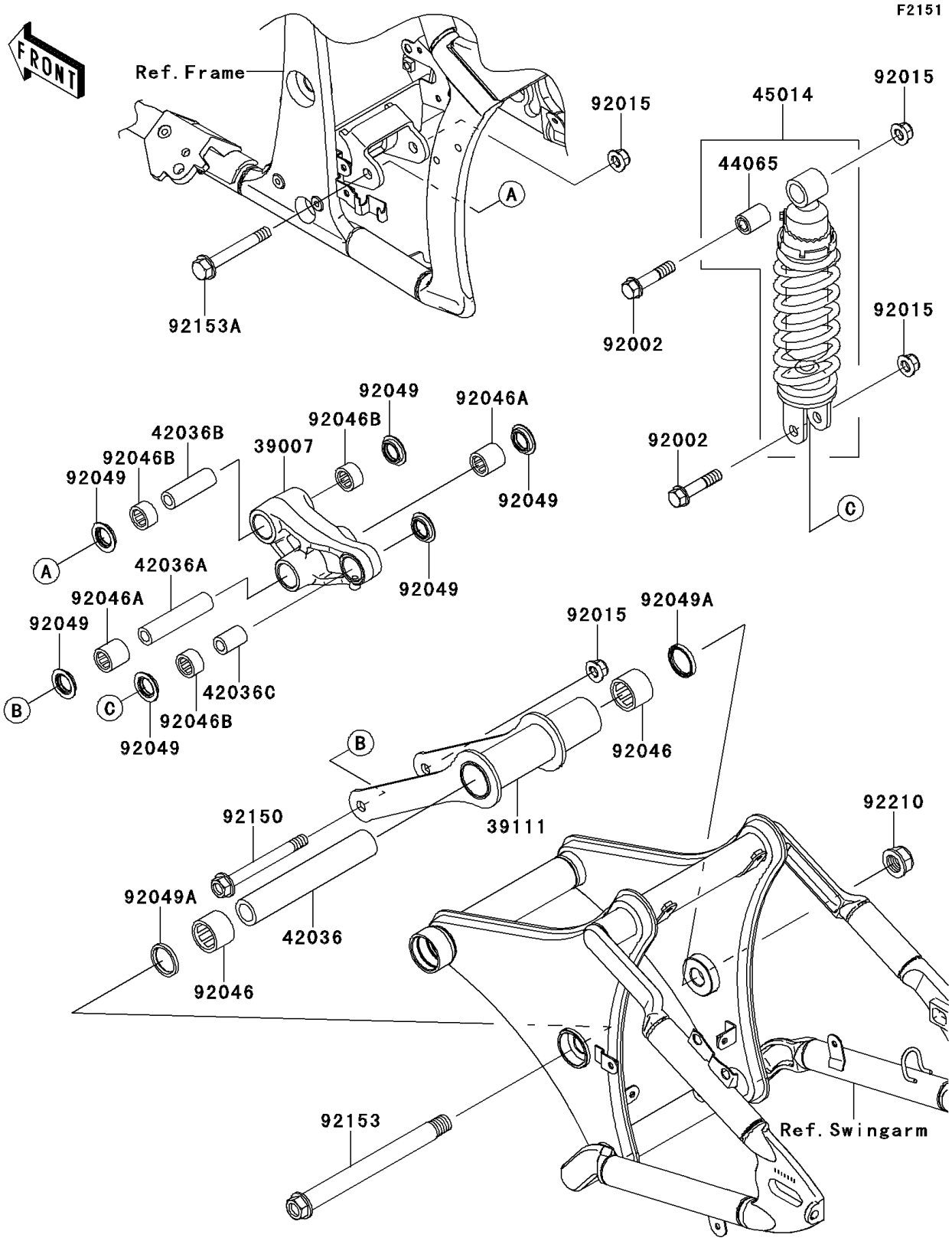

© 2024 Kawasaki Motors Corp., U.S.A.

2013 VULCAN 900 CLASSIC (Canadian) PARTS LIST

Suspension/Shock Absorber

ITEM NAME	PART NUMBER	QUANTITY
ARM-SUSP,UNI TRAK (Ref # 39007)	39007-0160	1
ROD-TIE,SUSPENSION (Ref # 39111)	39111-0026	1
SLEEVE,20.1X30X171 (Ref # 42036)	42036-0032	1
SLEEVE,12.1X20X92 (Ref # 42036A)	42036-0040	1
SLEEVE,ARM,FR (Ref # 42036B)	42036-1078	1
SLEEVE,12.1X20X30 (Ref # 42036C)	42036-1234	1
BUSHING,SHOCKABSORBER (Ref # 44065)	44065-1017	1
SHOCKABSORBER (Ref # 45014)	45014-0271	1
BOLT,12X55 (Ref # 92002)	92002-1130	2
NUT,LOCK,FLANGED,12MM (Ref # 92015)	92015-1433	4
BEARING-NEEDLE,30BM3726 (Ref # 92046)	92046-0019	2
BEARING-NEEDLE,BM202726 (Ref # 92046A)	92046-1110	2
BEARING-NEEDLE,BM202715 (Ref # 92046B)	92046-1112	3
SEAL-OIL,ARM (Ref # 92049)	92049-1109	6
SEAL-OIL,BJN 30374 (Ref # 92049A)	92049-1205	2
BOLT,FLANGED,12X117 (Ref # 92150)	92150-1895	1
BOLT,FLANGED,18X214 (Ref # 92153)	92153-1392	1
BOLT,FLANGED,12X90 (Ref # 92153A)	92153-1403	1
NUT,LOCK,18MM (Ref # 92210)	92210-0267	1

© 2024 Kawasaki Motors Corp., U.S.A.