2013 VULCAN® 900 CLASSIC PARTS DIAGRAM

Muffler(s)

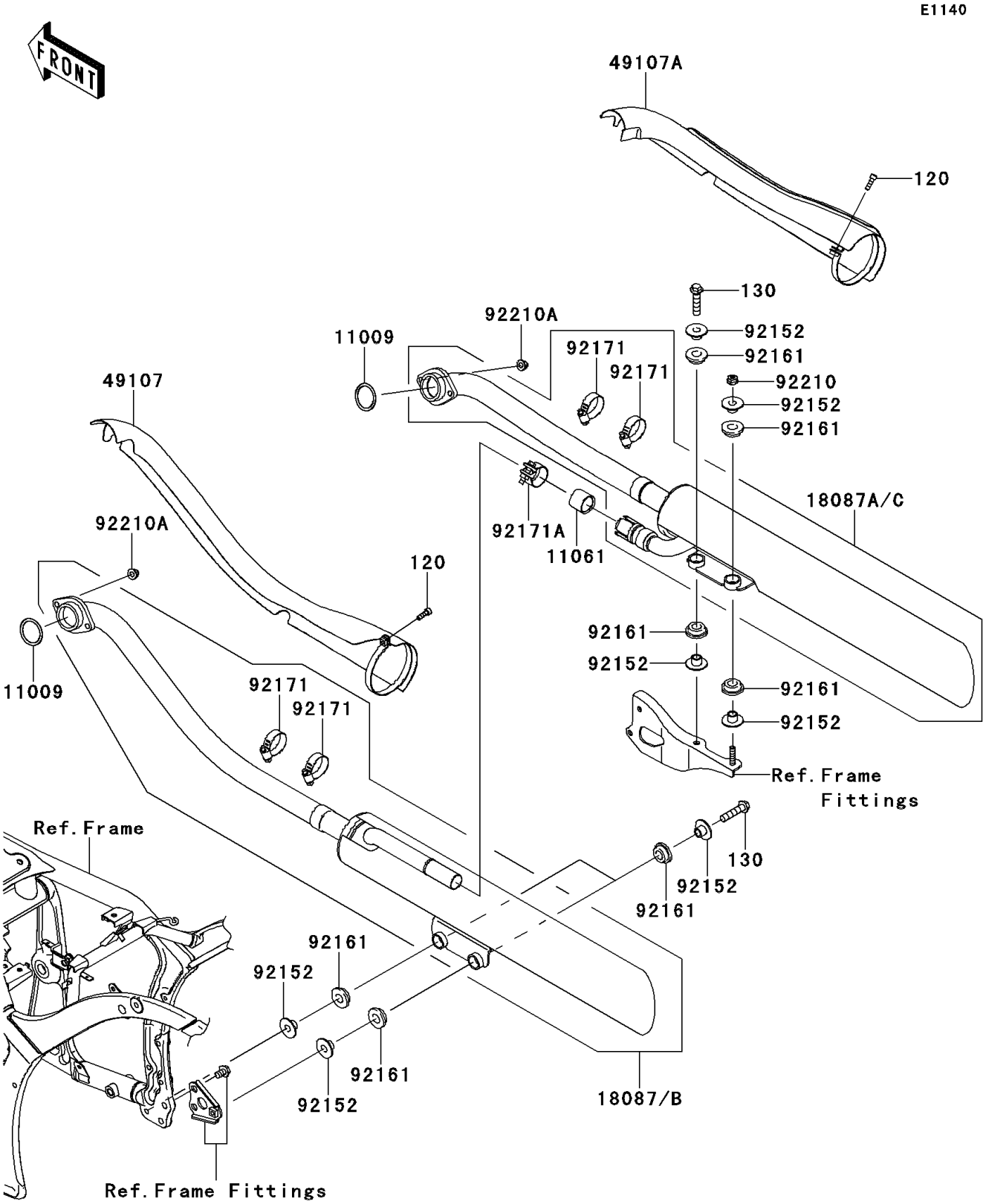

© 2026 Kawasaki Motors Corp., U.S.A.

2013 VULCAN® 900 CLASSIC PARTS LIST

Muffler(s)

ITEM NAME	PART NUMBER	QUANTITY
BOLT-SOCKET,6X20 (Ref # 120)	120CC0620	2
BOLT-FLANGED,8X35 (Ref # 130)	130BB0835	3
GASKET,EXHAUST PIPE HOLDER (Ref # 11009)	11009-1856	2
GASKET,MUFFLER JOINT (Ref # 11061)	11061-0207	1
MUFFLER,FR (Ref # 18087B)	18087-0281	1
MUFFLER,RR (Ref # 18087C)	18087-0282	1
COVER-EXHAUST PIPE,FR (Ref # 49107)	49107-0087	1
COVER-EXHAUST PIPE,RR (Ref # 49107A)	49107-0106	1
COLLAR,8.8X12X10.6 (Ref # 92152)	92152-0082	8
DAMPER (Ref # 92161)	92161-0135	8
CLAMP (Ref # 92171)	92171-0059	4
CLAMP (Ref # 92171A)	92171-0593	1
NUT,FLANGED,8MM (Ref # 92210)	92210-0004	1
NUT,CAP,8MM (Ref # 92210A)	92210-1132	4

© 2026 Kawasaki Motors Corp., U.S.A.